OLEODINAMICA

CATALOGO

Raccordi DIN2353

CATALOGO RACCORDI
DIN2353

REV. 02

Sede: 60035 JESI (AN) Via G. di Vittorio, 9 – Tel 0731 207231 - Fax 0731 64312
Filiale: 41100 MODENA – Via Respighi, 78 – Tel 059 270966 – Fax 059 3680302
e-mail: om@omoleodinamica.com - www.omoleodinamica.com C.F. e P.IVA 00478760424

Indice:

1. DADO DI SERRAGGIO
2. ANELLO TAGLIENTE
3. RACCORDO DIRITTO SALDABILE
4. RACCORDO D' ESTREMITA' DIRITTO - **Filetto Gas cilindrico**
5. RACCORDO D' ESTREMITA' DIRITTO - **Filetto UNF/UN**
6. RACCORDO D' ESTREMITA CONGUARNIZIONE - **Filetto metrico cilindrico**
7. RACCORDO D' ESTREMITA' DIRITTO CON GUARNIZIONE - **Filetto Gas cilindrico**
8. RACCORDO D' ESTREMITA' DIRITTO - **Filetto Metrico**
9. RACCORDO D' ESTREMITA' DIRITTO - **Filetto Gas Conico**
10. RACCORDO D' ESTREMITA' DIRITTO - **Filetto Metrico Conico**
11. RACCORDO D' ESTREMITA' DIRITTO - **Filetto NPTF**
12. RACCORDO D' ESTREMITA' A GOMITO - **Filetto Gas Conico**
13. RACCORDO D' ESTREMITA' A GOMITO - **Filetto Metrico Conico**
14. RACCORDO D' ESTREMITA' A GOMITO - **Filetto Gas Conico**
15. RACCORDO D' ESTREMITA' A GOMITO - **Filetto Gas Cilindrico**
16. RACCORDO D' ESTREMITA' A GOMITO - **Filetto Metrico Cilindrico**
17. RACCORDO D' ESTREMITA' A "T" - **Filetto Gas Conico**
18. RACCORDO D' ESTREMITA' A "T" - **Filetto Metrico Conico**
19. RACCORDO D' ESTREMITA' A "T" - **Filetto NPTF**
20. RACCORDO D' ESTREMITA' A "T" - **Filetto Gas Cilindrico**
21. RACCORDO D' ESTREMITA' A "T" - **Filetto Metrico Cilindrico**
22. RACCORDO INTERMEDIO DIRITTO
23. RACCORDO INTERMEDIO DIRITTO RIDOTTO
24. RACCORDO INTERMEDIO A GOMITO
25. RACCORDO INTERMEDIO A "T"
26. RACCORDO INTERMEDIO A CROCE
27. RACCORDO PASSAPARETE DIRITTO
28. RACCORDO PER MANOMETRO
29. RACCORDO AD OCCHIO - **Filetto Gas Cilindrico**
30. RACCORDO AD OCCHIO
31. RACCORDO AD OCCHIO CON GUARNIZIONE PIANA - **Filetto Gas Cilindrico**
32. RACCORDO AD OCCHIO CON GUARNIZIONE PIANA - **Filetto Metrico Cilindrico**
33. RACCORDO COMBINATO ORIENTABILE A GOMITO - **Filetto Gas Cilindrico**
34. RACCORDO COMBINATO A "T" ORIENTABILE CENTRALE - **Filetto Gas Cilindrico**

35. RACCORDO COMBINATO A "T" ORIENTABILE CENTRALE - **Filetto Metrico Cilindrico**
36. RACCORDO COMBINATO ORIENTABILE A "T" LATERALE - **Filetto Gas Cilindrico**
37. RACCORDO COMBINATO ORIENTABILE A "T" LATERALE - **Filetto Metrico cilindrico**
38. RACCORDO PASSANTE DIRITTO
39. RACCORDO PASSAPARETE A GOMITO
40. RACCORDO ORIENTABILE A GOMITO
41. RACCORDO ORIENTABILE CENTRALE
42. RACCORDO ORIENTABILE A "T" LATERALE
43. ESTREMITA' TUB. PER COMBINAZIONI CON GUAR. PIANA - **Fil. Gas Cil. e Fil. Metrico Cil.**
44. ESTREMITA' TUBOLARE CON GUARNIZIONE SERRATA - **Filetto Metrico Cilindrico**
45. RACCORDO DIRIT. PER COMBINAZIONI CON GUARNIZIONE IN GOMMA - **Filetto Gas Cilin.**
46. RACCORDO D' ESTREMITA' A "T" - **Filetto Gas Conico**
47. RACCORDO D' ESTREMITA' A "T" - **Filetto Metrico Conico**
48. RACCORDO D' ESTREMITA' A "T" - **Filetto NPTF**
49. RACCORDO D' ESTREMITA' A "T" - **Filetto Gas Cilindrico**
50. RACCORDO D' ESTREMITA' A "T" - **Filetto Metrico Cilindrico**
51. RACCORDO AD OCCHIO SENZA STROZZATURA - **Filetto Gas Cilindrico**
52. RACCORDO AD OCCHIO SENZA STROZZATURA - **Filetto Metrico Cilindrico**
53. RACCORDO AD OCCHIO - **Filetto Gas Cilindrico**
54. RACCORDO AD OCCHIO - **Filetto Metrico Cilindrico**
55. RACCORDO DI RIDUZIONE SEMPLICE
56. RACCORDO DI RIDUZIONE SEMPLICE
57. RACCORDO AD OCCHIO DOPPIO - **Filetto Gas Cilindrico**
58. RACCORDO AD OCCHIO DOPPIO - **Filetto Metrico Cilindrico**
59. RACORDO DOPPIO CON GUARNIZIONE PIANA - **Filetto Gas Cilindrico**
60. RACCORDO AD OCCHIO DOPPIO CON GUARNIZIONE PIANA - **Filetto Metrico Cilindrico**
61. RACCORDO DI RIDUZIONE FILETTATO MASCHIO FEMMINA - **Filetto Gas Cilindrico**
62. RACCORDO DI RIDUZIONE MASCHIO FEMMINA - **Filetto Gas Conico**
63. RACCORDO DI RIDUZIONE MASCHIO FEMMINA - **Filetto NPTF**
64. RACCORDO DIRITTO CON ESTREMITA' FEMMINA - **Filetto Gas Cilindrico**
65. RACCORDO DIRITTO CON ESTREMITA' FEMMINA - **Filetto Metrico Cilindrico**
66. TAPPO CILINDRICO CON ESAGONO INCASSATO - **Filetto Gas Cilindrico**
67. TAPPO CILINDRICO CON ESAGONO INCASSATO - **Filetto Metrico Cilindrico**
68. TAPPO CILIN. CON ESAGONO INCASSATO CON GUARNIZIONE - **Filetto Gas Cilin.**
69. TAPPO CONICO CON ESAGONO INCASSATO - **Filetto Gas Conico**

70. TAPPO CONICO CON ESAGONO INCASSATO - **Filetto NPTF**
71. TAPPO DI CHIUSURA TUBI
72. OGGIVA A SALDARE CON O-RING
73. TAPPO DI CHIUSURA TUBI
74. RACCORDO PER MANOMETRO CON O-RING
75. RACCORDO ORIENTABILE A 45° CON O-RING **- Filetto Metrico Cilindrico**
76. RACCORDO ORIENTABILE A GOMITO CON O-RING **- Filetto Metrico Cilindrico**
77. RACCORDO ORIENTABILE A T CON O-RING **- Filetto Metrico Cilindrico**
78. RACCORDO ORIENTABILE A L CON O-RING - **Filetto Metrico Cilindrico**
79. RACCORDO DIRITTO PER COMBINAZIONI GUARNIZIONE GOMMA\O-RING
80. RACCORDO DIRITTO PER COMBINAZIONI GUARNIZIONE GOMMA\O-RING
81. RACCORDO DI RIDUZIONE SEMPLICE CON O-RING - **Filetto Metrico Cilindrico**
82. RACCORDO DI RIDUZIONE SEMPLICE CON O-RING - **Filetto Metrico Cilindrico**
83. RACCORDO INTERMEDIO DIRITTO CON O-RING
84. RACCORDO ORIENTABILE A GOMITO CON CONTRODADO **- Filetto Gas Cilindrico**
85. RACCORDO ORIENTABILE A GOMITO CON CONTRODADO - **Filetto Metrico Cilindrico**
86. RACCORDO ORIENTABILE A T CON CONTRODADO **- Filetto Gas Cilindrico**
87. RACCORDO ORIENTABILE A T CON CONTRODADO - **Filetto Metrico Cilindrico**
88. RACCORDO ORIENTABILE A L CON CONTRODADO **- Filetto Gas Cilindrico**
89. RACCORDO ORIENTABILE A L CON CONTRODADO **- Filetto Metrico Cilindrico**
90. RACCORDO ORIENTABILE A 45° CON CONTRODADO **- Filetto Gas Cilindrico**
91. RACCORDO ORIENTABILE A 45° CON CONTRODADO **- Filetto Metrico Cilindrico**

OM81

DADO DI SERRAGGIO

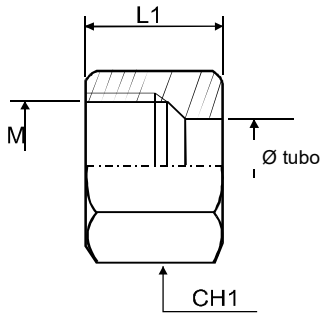

CODICE	SERIE				Dimensioni (mm)							Pressione Esercizio
	LL	L	S			L1	CH1				M	bar
OM81-4LL	LL					11	10				8X1	100
OM81-6LL	LL					11.5	12				10X1	100
OM81-8LL	LL					12	14				12X1	100
OM81-10LL	LL					12.5	17				14X1	100
OM81-12LL	LL					13	19				16X1	100
OM81-6L		L				14.5	14				12X1,5	315
OM81-8L		L				14.5	17				14X1,5	315
OM81-10L		L				15.5	19				16X1,5	315
OM81-12L		L				15.5	22				18X1,5	315
OM81-15L		L				17	27				22X1,5	315
OM81-18L		L				18	32				26X1,5	315
OM81-22L		L				20	36				30X2	160
OM81-28L		L				21	41				36X2	160
OM81-35L		L				24	50				45X2	160
OM81-42L		L				24	60				52X2	160
OM81-6S			S			16.5	17				14X1,5	630
OM81-8S			S			16.5	19				16X1,5	630
OM81-10S			S			17.5	22				18X1,5	630
OM81-12S			S			17.5	24				20X1,5	630
OM81-14S			S			20.5	27				22X1,5	630
OM81-16S			S			20.5	30				24X1,5	400
OM81-20S			S			24	36				30X2	400
OM81-25S			S			27	46				36X2	400
OM81-30S			S			29	50				42X2	400
OM81-38S			S			32.5	60				52X2	315

© Copyright by O.M. Oleodinamica srl - Jesi

OM88

ANELLO TAGLIENTE

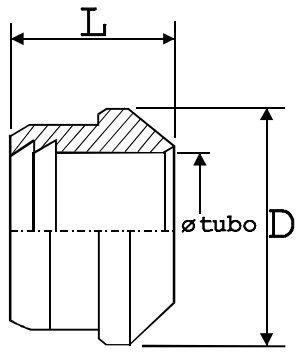

CODICE	SERIE					Dimensioni (mm)						Pressione Esercizio
	LL	L	S			L	D					bar
OM88-4LL	LL					6	6					100
OM88-5LL	LL					7						100
OM88-6LL	LL					7	8					100
OM88-8LL	LL					7	10					100
OM88-10LL	LL					7						100
OM88-12LL	LL					7.5						100
OM88-6LS		L	S			9.5	10					315/630
OM88-8LS		L	S			9.5	12					315/630
OM88-10LS		L	S			10	14					315/630
OM88-12LS		L	S			10	16					315/630
OM88-15L		L				10	19					315
OM88-18L		L				10	23					315
OM88-22L		L				10.5	27					160
OM88-28L		L				11	33					160
OM88-35L		L				13	41					160
OM88-42L		L				13	48					160
OM88-14S			S			10	19					630
OM88-16S			S			10.5	21					400
OM88-20S			S			12	26					400
OM88-25S			S			12	32					400
OM88-30S			S			13	36					400
OM88-38S			S			13	44					400

© Copyright by O.M. Oleodinamica srl - Jesi

OM91

RACCORDO DIRITTO SALDABILE

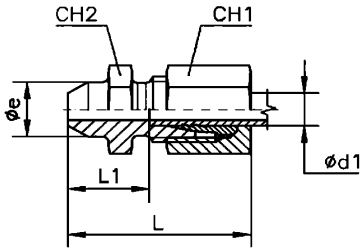

CODICE	SERIE			Tubo	Dimensioni (mm)							Pressione Esercizio
	LL	L	S	Ød1		L	L1	Ø e	CH1	CH2		bar
OM91-6L		L		6		29	14	10	14	12		315
OM91-8L		L		8		31	16	12	17	14		315
OM91-10L		L		10		33	18	14	19	17		315
OM91-12L		L		12		33	18	16	22	19		315
OM91-15L		L		15		37	22	19	27	22		315
OM 91-18L		L		18		40	23,5	22	32	27		315
OM91-22L		L		22		45	28,5	27	36	32		160
OM91-28L		L		28		47	30,5	32	41	41		160
OM91-35L		L		35		54	32,5	40	50	46		160
OM91-42L		L		42		58	35	46	60	55		160
OM91-6S			S	6		34	19	11	17	14		630
OM91-8S			S	8		36	21	13	19	17		630
OM91-10S			S	10		39	22,5	15	22	19		630
OM91-12S			S	12		41	24,5	17	24	22		630
OM91-14S			S	14		45	27	19	27	24		630
OM91-16S			S	16		45	26,5	21	30	27		400
OM91-20S			S	20		51	29,5	26	36	32		400
OM91-25S			S	25		56	32	31	46	41		400
OM91-30S			S	30		62	35,5	36	50	46		400
OM91-38S			S	38		69	38	44	60	55		315

© Copyright by O.M. Oleodinamica srl - Jesi

OM92

RACCORDO DI ESTREMITA' DIRITTO - Filetto Gas cil.

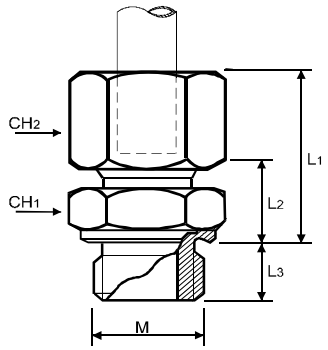

CODICE	SERIE				Dimensioni (mm)						Pressione Esercizio
	LL	L	S			L1	L2	L3	CH1	CH2	M	bar
OM92-6LR		L				23	8.5	8	14	14	1/8	315
OM92-8LR		L				25	10	12	17	19	1/4	315
OM92-8LR 1/2		L				26	10.5		17		1/2	315
OM92-8LR 1/8		L				26	11.5		17		1/8	315
OM92-8LR 3/8		L				26	11.5	12	17	22	3/8	315
OM92-10LR		L				26	11	12	19	19	1/4	315
OM92-10LR 1/8		L									1/8	315
OM92-10LR 3/8		L				27	12.5	12	19	22	3/8	315
OM92-12LR 1/4		L				27	12	12	22	19	1/4	315
OM92-12LR		L				27	12.5	12	22	22	3/8	315
OM92-12LR 1/2		L				28	13	14	22	27	1/2	315
OM92-15LR		L				29	14	14	27	27	1/2	315
OM92-18LR		L				31	14.5	14	32	27	1/2	315
OM92-18LR 3/4		L				31			32		3/8	315
OM92-22LR		L				33	16.5	16	36	32	3/4	160
OM92-28LR		L				34	17.5	18	41	41	1"	160
OM92-35LR		L				39	17.5	20	50	50	1"1/4	160
OM92-42LR		L				42	19	22	60	55	1"1/2	160
OM92-6SR			S			28	13	12	17	19	1/4	630
OM92-8SR			S			30	15	12	19	19	1/4	630
OM92-10SR			S			31	15	12	22	22	3/8	630
OM92-12SR			S			33	17	12	24	22	3/8	630
OM92-12SR 1/2			S			34	17.5	14	24	27	1/2	630
OM92-14SR			S			37	19	14	27	27	1/2	630
OM92-16SR			S			37	18.5	14	30	27	1/2	400
OM92-16SR 3/4			S			37			30		3/4	400
OM92-16SR 3/8			S			37			30		3/8	400
OM92-20SR			S			42	20.5	16	36	32	3/4	400
OM92-20SR 1/2			S			43			36		1/2	400
OM92-25SR			S			47	23	18	46	41	1"	400
OM92-25SR 3/4			S			48			46		3/4	250
OM92-30SR			S			50	23.5	20	50	50	1"1/4	250
OM92-30SR 1"			S			47			50		1"	250
OM92-38SR						57	26	22	60	55	1"1/2	250

© Copyright by O.M. Oleodinamica srl - Jesi

OM92 UNF/UN

RACCORDO DI ESTREMITA' DIRITTO - Filetto UNF/UN

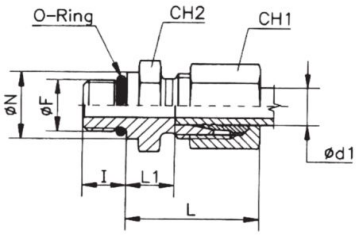

CODICE	SERIE			Dimensioni (mm)							Pressione Esercizio
	LL	L	S	Ø F	Ø D1	ØN	L1	L	CH2	CH1	bar
OM92-8L-7/16-20UNF		L		7/16-20UNF	8	14,4	10	25	17	17	315
OM92-10L-7/16-20UNF		L		7/16-20UNF	10	14,4	11	26	17	19	315
OM92-12L-9/16-18UNF		L		9/16-18UNF	12	17,6	11	26	19	22	315
OM92-12L-3/4-16UNF		L		3/4-16UNF	12	22,3	13	28	24	22	315
OM92-12L-7/8-14UNF		L		7/8-14UNF	12	25,5	14,3	29	27	22	315
OM92-15L-3/4-16UNF		L		3/4-16UNF	15	22,3	14	29	24	27	315
OM92-18L-3/4-16UNF		L		3/4-16UNF	18	22,3	14,5	31	27	32	315
OM92-18L-7/8-14UNF		L		7/8-14UNF	18	25,5	14,8	31	27	32	315
OM92-22L-7/8-14UNF		L		7/8-14UNF	22	25,5	16,8	33	32	36	160
OM92-22L-1”1/16-12UN		L		1”1/16-12UN	22	31,9	16,5	33	32	36	160
OM92-22L-1”5/16-12UN		L		1”5/16-12UN	22	38,2	17,5	34	41	36	160
OM92-28L-1”1/16-12UN		L		1”1/16-12UN	28	31,9	17,5	34	41	41	160
OM92-28L-1”5/16-12UN		L		1”5/16-12UN	28	38,2	17,5	34	41	41	160
OM92-35L-1”5/16-12UN		L		1”5/16-12UN	35	38,2	17,5	39	46	50	160
OM92-35L-1”5/8-12UN		L		1”5/8-12UN	35	47,7	17,5	39	50	50	160
OM92-42L-1”5/8-12UN		L		1”5/8-12UN	42	47,7	19	42	55	60	160
OM92-8S-7/16-20UNF			S	7/16-20UNF	8	16	15	30	17	19	630
OM92-10S-9/16-18UNF			S	9/16-18UNF	10	17,6	14,5	31	19	22	630
OM92-12S-9/16-18UNF			S	9/16-18UNF	12	17,6	14,5	31	22	24	630
OM92-12S-3/4-16UNF			S	3/4-16UNF	12	22,3	17,5	34	24	24	630
OM92-16S-3/4-16UNF			S	3/4-16UNF	16	22,3	15,5	34	24	30	400
OM92-16S-7/8-14UNF			S	7/8-14UNF	16	25,5	18,8	37	27	30	400
OM92-20S-3/4-16UNF			S	3/4-16UNF	20	22,3	20,5	42	32	36	400
OM92-20S-7/8-14UNF			S	7/8-14UNF	20	25,5	20,8	42	32	36	400
OM92-20S-1”1/16-12UN			S	1”1/16-12UN	20	31,9	20,5	42	32	36	400
OM92-25S-1”1/16-12UN			S	1”1/16-12UN	25	31,9	23	47	36	46	400
OM92-25S-1”5/16-12UN			S	1”5/16-12UN	25	38,2	23	47	41	46	400
OM92-30S-1”5/16-12UN			S	1”5/16-12UN	30	38,2	23,5	50	46	50	400
OM92-30S-1”5/8-12UN			S	1”5/8-12UN	30	47,7	23,5	50	50	50	400
OM92-38S-1”5/8-12UN			S	1”5/8-12UN	38	47,7	26	57	55	60	315

© Copyright by O.M. Oleodinamica srl - Jesi

OM92GG

RACCORDO DI ESTREMITA CON GUARNIZIONE - Filetto Metrico Cil.

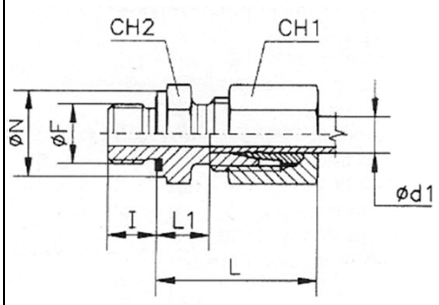

FORMA E DIN 3852

CODICE	SERIE			Ø tubo	Dimensioni (mm)						Pressione Esercizio
	LL	L	S		I	L1	L	F	CH1	CH2	Bar
OM92GG-6LM		L		6	23	8.5	14	10X1	14	14	315
OM92GG-8LM		L		8	25	10	17	12X1,5	17	17	315
OM92GG-10LM		L		10	26	11	19	14X1,5	19	19	315
OM92GG-10LM 18A		L		10	27	12.5	19	18X1,5	24	24	315
OM92GG-10LM 22A		L		10	28	13	19	22X1,5	27	27	315
OM92GG-12LM		L		12	27	12.5	22	16X1,5	22	22	315
OM92GG-12LM 14A		L		12	26	12	22	14X1,5	19	19	315
OM92GG-12LM 22A		L		12	28	13	22	22X1,5	27	27	315
OM92GG-15LM		L		15	29	14	27	18X1,5	24	24	315
OM92GG-15LM 16A		L		15	29	13.5	27	16X1,5	22	24	315
OM92GG-18LM		L		18	31	14.5	32	22X1,5	27	27	315
OM92GG-22LM		L		22	33	16.5	36	26X1,5	32	32	160
OM92GG-22LM 22A		L		22	33	16.5	36	22X1,5	27	32	160
OM92GG-28LM		L		28	34	17.5	41	33X2	40	41	160
OM92GG-35LM		L		35	39	17.5	50	42X2	50	50	160
OM92GG-42LM		L		42	42	19	60	48X2	55	55	160
OM92GG-6SM			S	6	28	13	17	12X1,5	17	17	630
OM92GG-8SM			S	8	30	15	19	14X1,5	19	19	630
OM92GG-10SM			S	10	31	15	22	16X1,5	22	22	630
OM92GG-12SM			S	12	33	17	24	18X1,5	24	24	630
OM92GG-12SM 22A			S	12	34	17.5	24	22X1,5	27	27	630
OM92GG-14SM			S	14	37	19	27	20X1,5	26	27	630
OM92GG-16SM			S	16	37	18.5	30	22X1,5	27	27	400
OM92GG-16SM 18A			S	16	36	18	30	18X1,5	24	27	400
OM92GG-20SM			S	20	42	20.5	36	27X2	32	32	400
OM92GG-25SM			S	25	47	23	46	33X2	40	41	400
OM92GG-30SM			S	30	50	23.5	50	42X2	50	50	400
OM92GG-38SM			S	38	57	26	60	48X2	55	55	315

NB. I CODICI INDICATI SI RIFERISCONO AI RACCORDI COMPLETI DI ANELLO E DADO, PER ORDINARE SOLO CORPO CIOE' SENZA DADO E ANELLO INDICARE ***OM92GGSC-****....*

© Copyright by O.M. Oleodinamica srl - Jesi

OM92GG

RACCORDO DI ESTREMITA' DIRITTO CON GUARNIZIONE - Filetto Gas cil.

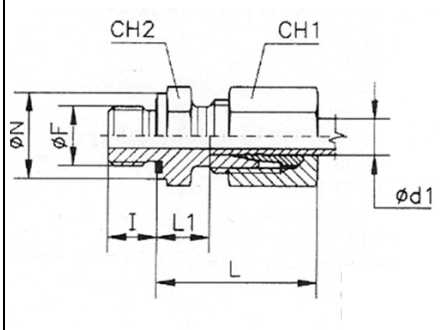

FORMA E DIN 3852

CODICE	SERIE			Ø tubo	Dimensioni (mm)						Pressione Esercizio
	LL	L	S		I	L1	L	F	CH1	CH2	bar
OM92GG-6LR		L		6	23	8.5	14	1/8	14	14	315
OM92GG-6LR 1/4		L		6	25	10	14	1/4	19	19	315
OM92GG-6LR 3/8		L		6	26	11.5	14	3/8	22	22	315
OM92GG-8LR		L		8	25	10	17	1/4	19	19	315
OM92GG-8LR 1/8		L		8	24	8.5	17	1/8	14	14	315
OM92GG-8LR 3/8		L		8	26	11.5	17	3/8	22	22	315
OM92GG-8LR 1/2		L		8	27	12	17	1/2	27	27	315
OM92GG-10LR		L		10	26	11	19	1/4	19	19	315
OM92GG-10LR 1/8		L		10	26	11	19	1/8	14	17	315
OM92GG-10LR 3/8		L		10	27	12.5	19	3/8	22	22	315
OM92GG-10LR 1/2		L		10	28	13	19	1/2	27	27	315
OM92GG-12LR		L		12	27	12.5	22	3/8	22	22	315
OM92GG-12LR 1/4		L		12	26	12	22	1/4	19	19	315
OM92GG-12LR 1/2		L		12	28	13	22	1/2	27	27	315
OM92GG-15LR		L		15	29	14	27	1/2	27	27	315
OM92GG-15LR 3/8		L		15	29	13.5	27	3/8	22	24	315
OM92GG-15LR 3/4		L		15	30	15	27	3/4	32	32	315
OM92GG-18LR		L		18	31	14.5	32	1/2	27	27	315
OM92GG-18LR 3/4		L		18	30	14.5	32	3/4	32	32	315
OM92GG-22LR		L		22	33	16.5	36	3/4	32	32	160
OM92GG-22LR 1/2		L		22	33	16.5	36	1/2	27	32	160
OM92GG-22LR 1		L		22	34	17.5	36	1	40	41	160
OM92GG-28LR		L		28	34	17.5	41	1	40	41	160
OM92GG-28LR 3/4		L		28	34	17.5	41	3/4	32	41	160
OM92GG-35LR		L		35	39	17.5	50	1.1/4	50	50	160
OM92GG-35LR 1		L		35	39	17.5	50	1	40	46	160
OM92GG-42LR		L		42	42	19	60	1.1/2	55	55	160
OM92GG-6SR			S	6	28	13	17	1/4	19	19	630
OM92GG-8SR			S	8	30	15	19	1/4	19	19	630
OM92GG-8SR 3/8			S	8	30	15.5	19	3/8	22	22	630
OM92GG-10SR			S	10	31	15	22	3/8	22	22	630
OM92GG-10SR 1/4			S	10	31	14.5	22	1/4	19	19	630
OM92GG-10SR 1/2			S	10	34	17.5	22	1/2	27	27	630
OM92GG-12SR			S	12	33	17	24	3/8	22	22	630
OM92GG-12SR 1/4			S	12	33	16.5	24	1/4	19	22	630
OM92GG-12SR 1/2			S	12	34	17.5	24	1/2	27	27	630
OM92GG-14SR			S	14	37	19	27	1/2	27	27	630
OM92GG-14SR 3/8			S	14	36	18.5	27	3/8	22	24	630
OM92GG-16SR			S	16	37	18.5	30	1/2	27	27	400
OM92GG-16SR 3/8			S	16	36	18	30	3/8	22	27	400
OM92GG-16SR 3/4			S	20	39	20.5	30	3/4	32	32	400
OM92GG-20SR			S	20	42	20.5	36	3/4	32	32	400
OM92GG-20SR 1/2			S	20	42	20.5	36	1/2	27	32	400
OM92GG-25SR			S	25	47	23	46	1	40	41	400
OM92GG-25SR 3/4			S	25	47	23	46	3/4	32	41	400
OM92GG-30SR			S	30	50	23.5	50	1.1/4	50	50	400
OM92GG-30SR 1			S	30	50	23.5	50	1	40	46	400
OM92GG-38SR			S	38	57	26	60	1.1/2	55	55	315
OM92GG-38SR 1.1/4			S	38	57	26	60	1.1/4	50	55	315

NB. I CODICI INDICATI SI RIFERISCONO AI RACCORDI COMPLETI DI ANELLO E DADO, PER ORDINARE SOLO CORPO CIOE' SENZA DADO E ANELLO INDICARE ***OM92GGSC***-….

© Copyright by O.M. Oleodinamica srl - Jesi

OM92

RACCORDO DI ESTREMITA' DIRITTO - Filetto Metrico

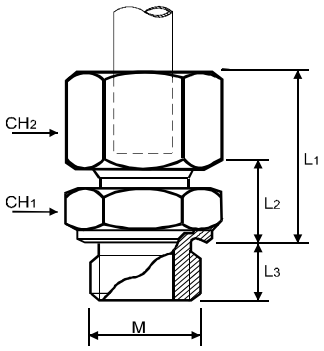

CODICE	SERIE				Dimensioni (mm)							Pressione Esercizio
	LL	L	S			L1	L2	L3	CH1	CH2	M	bar
OM92-6LM		L				23	8.5	8	14	14	10X1	315
OM92-8LM		L				25	10	12	17	17	12X1,5	315
OM92-10LM		L				26	11	12	19	19	14X1,5	315
OM92-12LM		L				27	12.5	12	22	22	16X1,5	315
OM92-15LM		L				28	14	14	23	27	18X1,5	315
OM92-18LM		L				29	14.5	14	27	32	22X1,5	315
OM92-22LM		L				31	16.5	16	31	36	26X1,5	160
OM92-28LM		L				33	17.5	18	39	41	33X2	160
OM92-35LM		L				34	17.5	20	49	50	42X2	160
OM92-42LM		L				39	19	22	55	60	48X2	160
OM92-6SM			S			42	13	12	17	17	12X1,5	630
OM92-8SM			S			28	15	12	19	19	14X1,5	630
OM92-10SM			S			30	15	12	21	22	16X1,5	630
OM92-12SM			S			31	17	12	23	24	18X1,5	630
OM92-14SM			S			34	19	14	25	27	20X1,5	630
OM92-16SM			S			37	18.5	14	27	30	22X1,5	630
OM92-20SM			S			37	20.5	16	32	36	27X2	400
OM92-25SM			S			43	23	18	39	46	33X2	400
OM92-30SM			S			48	23.5	20	49	50	42X2	400
OM92-38SM			S			47	26	22	55	60	48X2	400

© Copyright by O.M. Oleodinamica srl - Jesi

OM93

RACCORDO DI ESTREMITA' DIRITTO - Filetto Gas Conico

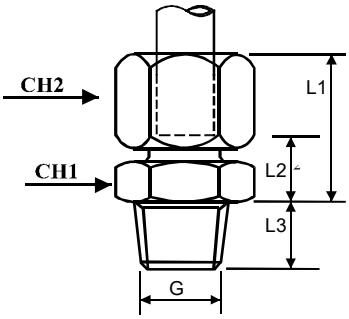

CODICE	SERIE				Dimensioni (mm)						Pressione Esercizio
	LL	L	S			L1	L2	L3	CH1	CH2	G	bar
OM93-4LLR	LL					18	8	8	11	10	1/8”	100
OM93-5LLR	LL					18	6.5	8	11	12	1/8”	100
OM93-6LLR	LL					18	6.5	8	11	12	1/8”	100
OM93-8LLR	LL					20	8.5	8	12	14	1/8”	100
OM93-8LLR 1/4	LL					20	8.5	12	14	14	1/4"	100
OM93-10LLR	LL					20	8.5	12	14	17	1/4"	100
OM93-12LLR	LL					20	8	12	17	19	1/4"	100
OM93-12LLR 3/8	LL					20	8	12	17	19	3/8"	100
OM93-6LR		L				23	7	10	12	14	1/8”	315
OM93-8LR		L				25	8	13	17	17	1/4"	315
OM93-8LR 3/8		L				26	9	13	19	17	3/8"	315
OM93-10LR		L				26	9	13	17	19	1/4"	315
OM93-10LR 3/8		L				27	10	13	19	19	3/8"	315
OM93-12LR 1/4		L				27	10	13	19	22	1/4"	315
OM93-12LR		L				27	10	13	19	22	3/8"	315
OM93-12LR 1/2		L				27	10	16	22	22	1/2"	315
OM93-15LR		L				29	11	16	24	27	1/2"	315
OM93-18LR		L				31	11.5	16	27	32	1/2"	315
OM93-22LR		L				33	13.5	18	32	36	3/4”	160
OM93-28LR		L				34	14.5	20	41	41	1"	160
OM93-35LR		L				39	14.5	21	46	50	1"1/4	160
OM93-42LR		L				42	16	22	55	60	1"1/2	160
OM93-6SR			S			28	12	13	17	17	1/4”	630
OM93-8SR			S			30	13	13	17	19	1/4”	630
OM93-10SR			S			31	12.5	13	19	22	3/8”	630
OM93-12SR			S			33	14.5	13	22	24	3/8”	630
OM93-12SR 1/2			S			33	14.5	16	22	24	1/2"	630
OM93-14SR			S			37	16	16	24	27	1/2”	630
OM93-16SR			S			37	17.5	16	27	30	1/2”	400
OM93-20SR			S			42	17.5	18	32	36	3/4”	400
OM93-25SR			S			47	18	20	41	46	1"	400
OM93-30SR			S			50	19.5	21	46	50	1"1/4	400
OM93-38SR			S			57	22	22	55	60	1"1/2	315

© Copyright by O.M. Oleodinamica srl - Jesi

OM93

RACCORDO DI ESTREMITA' DIRITTO - Filetto Metrico Conico

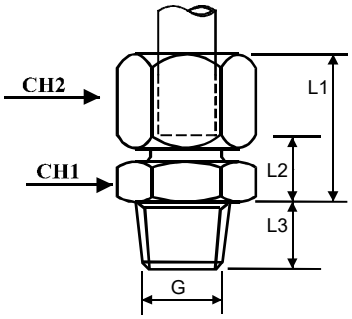

CODICE	SERIE				Dimensioni (mm)						Pressione Esercizio
	LL	L	S			L1	L2	L3	CH1	CH2	G	bar
OM93-4LLM	LL					18	8	8	11	10	8X1	100
OM93-6LLM	LL					18	6.5	8	11	12	10X1	100
OM93-8LLM	LL					20	8.5	8	12	14	10X1	100
OM93-6LM		L				23	7	10	12	14	10X1	315
OM93-8LM		L				25	8	12	17	17	12X1,5	315
OM93-10LM		L				26	9	12	17	19	14X1,5	315
OM93-12LM		L				27	10	12	19	22	16X1,5	315
OM93-15LM		L				29	11	12	24	27	18X1,5	315
OM93-18LM		L				31	11.5	14	27	32	22X1,5	315
OM93-22LM		L				33	13.5	18	32	36	26X1,5	160
OM93-28LM		L				34	14.5	20	41	41	33X2	160
OM93-35LM		L				39	14.5	21	46	50	42X2	160
OM93-42LM		L				42	16	22	55	60	48X2	160
OM93-6SR			S			28	12	12	17	17	12X1,5	630
OM93-8SM			S			30	13	12	17	19	14X1,5	630
OM93-10SM			S			31	12.5	12	19	22	16X1,5	630
OM93-12SM			S			33	14.5	12	22	24	18X1,5	630
OM93-14SM			S			37	16	14	24	27	20X1,5	630
OM93-16SM			S			37	17.5	14	27	30	22X1,5	400
OM93-20SM			S			42	17.5	18	32	36	27X2	400
OM93-25SM			S			47	18	20	41	46	33X2	400
OM93-30SM			S			50	19.5	21	46	50	42X2	400
OM93-38SM			S			57	22	22	55	60	48X2	315

© Copyright by O.M. Oleodinamica srl - Jesi

OM93

RACCORDO DI ESTREMITA' DIRITTO - Filetto NPTF

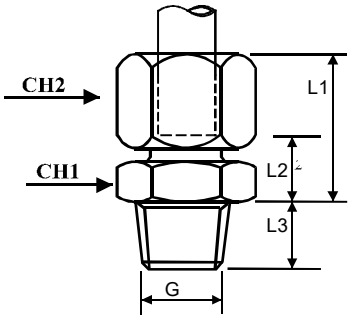

CODICE	SERIE				Dimensioni (mm)						Pressione Esercizio
	LL	L	S		L1	L2	L3	CH1	CH2	G	bar
OM93-4LLNPT	LL				18	8	10	11	10	1/8”	100
OM93-6LLNPT	LL				18	6.5	10	11	12	1/8”	100
OM93-8LLNPT	LL				20	8.5	10	12	14	1/8”	100
OM93-6LNPT		L			23	7	10	12	14	1/8”	315
OM93-6LNPT 1/4		L			24	8	15	17	14	1/4"	315
OM93-8LNPT		L			25	8	15	17	17	1/4”	315
OM93-10LNPT		L			26	9	15	17	19	1/4”	315
OM93-10LNPT 3/8		L			27	10	15	19	19	3/8"	315
OM93-12LNPT 1/4		L			27	10	15	19	22	1/4"	315
OM93-12LNPT		L			27	10	15	19	22	3/8"	315
OM93-12LNPT 1/2		L			27	10	20	22	22	1/2"	315
OM93-15LNPT		L			29	11	20	24	27	1/2"	315
OM93-18LNPT		L			31	11.5	20	27	32	1/2"	315
OM93-22LNPT		L			33	13.5	20	32	36	3/4"	160
OM93-28LNPT		L			34	14.5	25	41	41	1"	160
OM93-35LNPT		L			39	14.5	26	46	50	1"1/4	160
OM93-42LNPT		L			42	16	26	55	60	1"1/2	160
OM93-6SNPT			S		28	12	15	17	17	1/4"	630
OM93-8SNPT			S		30	13	15	17	19	1/4"	630
OM93-10SNPT 1/4			S		31	12.5	15	19	22	1/4"	630
OM93-10SNPT			S		31	12.5	15	19	22	3/8"	630
OM93-12SNPT 1/4			S		33	14.5	15	22	24	1/4"	630
OM93-12SNPT			S		33	14.5	15	22	24	3/8"	630
OM93-12SNPT 1/2			S		33	14.5	20	22	24	1/2"	400
OM93-14SNPT			S		37	16	20	24	27	1/2"	400
OM93-16SNPT			S		37	17.5	20	27	30	1/2"	400
OM93-20SNPT			S		42	17.5	20	32	36	3/4"	400
OM93-25SNPT			S		47	18	25	41	46	1"	315
OM93-30SNPT			S		50	19.5	26	46	50	1"1/4	315
OM93-38SNPT			S		57	22	26	55	60	1"1/2	315

© Copyright by O.M. Oleodinamica srl - Jesi

OM94

RACCORDO DI ESTREMITA' A GOMITO - Filetto Gas Conico

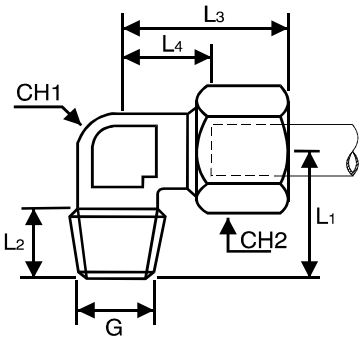

CODICE	SERIE			Ø tubo	Dimensioni (mm)							Pressione Esercizio
	LL	L	S		L1	L2	L3	L4	CH1	CH2	G	bar
OM94-4LLR	LL			4	17	8	21	11	9	10	1/8"	100
OM94-6LLR	LL			6	17	8	21	9.5	9	12	1/8"	100
OM94-8LLR	LL			8	20	8	23	11.5	12	14	1/8"	100
OM94-10LLR	LL			10	25	12	27	15	14	17	1/4"	100
OM94-12LLR	LL			12	23	12	25	13	17	19	1/4"	100
OM94-6LR		L		6	20	8	27	12	12	14	1/8"	315
OM94-6LR1/4"		L		6	20	8	27	12	12	14	1/4"	315
OM94-8LR		L		8	26	12	29	14	12	17	1/4"	315
OM94-8LR1/8"		L		8	26	12	29	14	12	17	1/8"	315
OM94-8LR3/8"		L		8	26	12	29	14	12	17	3/8"	315
OM94-10LR		L		10	27	12	30	15	14	19	1/4"	315
OM94-12LR		L		12	28	12	32	17	17	22	3/8"	315
OM94-12LR1/2"		L		12	28	12	32	17	17	22	1/2"	315
OM94-12LR1/4"		L		12	28	12	32	17	17	22	1/4"	315
OM94-15LR		L		15	34	14	36	21	19	27	1/2"	315
OM94-15LR3/8"		L		15	34	14	36	21	19	27	3/8"	315
OM94-18LR		L		18	36	14	40	23.5	24	32	1/2"	315
OM94-6SR			S	6	26	12	31	16	12	17	1/4"	630
OM94-8SR			S	8	27	12	32	17	14	19	1/4"	630
OM94-10SR			S	10	28	12	34	17.5	17	22	3/8"	630
OM94-12SR			S	12	31	12	38	21.5	17	24	3/8"	630
OM94-14SR			S	14	32	14	40	22	19	27	1/2"	630
OM94-16SR			S	16	32	14	43	24.5	24	30	1/2"	400

© Copyright by O.M. Oleodinamica srl - Jesi

OM94

RACCORDO DI ESTREMITA' A GOMITO - Filetto Metrico Conico

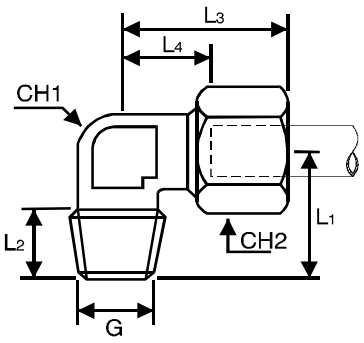

CODICE	SERIE			Ø tubo	Dimensioni (mm)							Pressione Esercizio
	LL	L	S		L1	L2	L3	L4	CH1	CH2	G	bar
OM94-4LLM	LL			4	17	8	21	11	9	10	8X1	100
OM94-6LLM	LL			6	17	8	21	9.5	9	12	10X1	100
OM94-8LLM	LL			8	20	8	23	11.5	12	14	10X1	100
OM94-6LM		L		6	20	8	27	12	12	14	10X1	315
OM94-8LM		L		8	26	12	29	14	12	17	12X1,5	315
OM94-10LM		L		10	27	12	30	15	14	19	14X1,5	315
OM94-12LM		L		12	28	12	32	17	17	22	16X1,5	315
OM94-15LM		L		15	32	14	36	21	19	27	18X1,5	315
OM94-18LM		L		18	36	14	40	23.5	24	32	22X1,5	315
OM94-6SM			S	6	26	12	31	16	12	17	12X1,5	630
OM94-8SM			S	8	27	12	32	17	14	19	14X1,5	630
OM94-10SM			S	10	28	12	34	17.5	17	22	16X1,5	630
OM94-12SM			S	12	31	12	38	21.5	17	24	18X1,5	630
OM94-14SM			S	14	32	14	40	22	19	27	20X1,5	630
OM94-16SM			S	16	32	14	43	24.5	24	30	22X1,5	630

© Copyright by O.M. Oleodinamica srl - Jesi

OM94

RACCORDO DI ESTREMITA' A GOMITO - Filetto Gas Conico

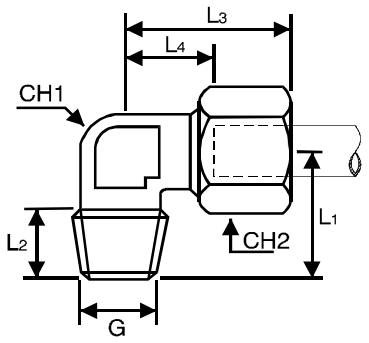

CODICE	SERIE			Ø tubo	Dimensioni (mm)							Pressione Esercizio
	LL	L	S		L1	L2	L3	L4	CH1	CH2	G	bar
OM94-4LLNPT	LL			4	17	8	21	11	9	10	1/8"	100
OM04-6LLNPT	LL			6	17	8	21	9.5	9	12	1/8"	100
OM04-8LLNPT	LL			8	20	8	23	11.5	12	14	1/8"	100
OM94-6LNPT		L		6	12	8	27	12	12	14	1/8"	315
OM94-8LNPT		L		8	26	12	29	14	12	17	1/4"	315
OM94-10LNPT		L		10	27	12	30	15	14	19	1/4"	315
OM94-12LNPT		L		12	28	12	32	17	17	22	3/8"	315
OM94-15LNPT		L		15	34	14	36	21	19	27	1/2"	315
OM94-18LNPT		L		18	36	14	40	23.5	24	32	1/2"	315
OM94-22LNPT		L		22	42	16	44	27.5	27	36	3/4"	160
OM94-28LNPT		L		28	48	18	47	30.5	36	41	1"	160
OM94-35LNPT		L		35	54	20	56	34.5	41	50	1 1/4"	160
OM94-42LNPT		L		42	61	22	63	40	50	60	1 1/2"	160
OM94-6SNPT			S	6	26	12	31	16	12	17	1/4"	630
OM94-8SNPT			S	8	17	12	32	17	14	19	1/4"	630
OM94-10SNPT			S	10	28	12	34	17.5	17	22	3/8"	630
OM94-12SNPT			S	12	31	12	38	21.5	17	24	3/8"	630
OM94-14SNPT			S	14	34	16	40	22	19	27	1/2"	630
OM94-16SNPT			S	16	36	16	43	24.5	24	30	1/2"	400
OM94-20SNPT			S	20	42	16	48	26.5	27	36	3/4"	400
OM94-25SNPT			S	25	42	18	54	30	36	46	1"	400
OM94-30SNPT			S	30	54	20	62	35.5	41	50	1 1/4"	400
OM94-38SNPT			S	38	61	22	72	41	50	60	1 1/2"	315

© Copyright by O.M. Oleodinamica srl - Jesi

OM95

RACCORDO DI ESTREMITA' A GOMITO - Filetto Gas Cilindrico

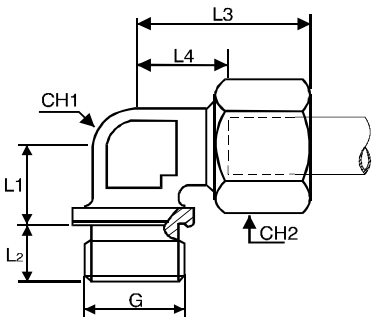

CODICE	SERIE			Ø tubo	Dimensioni (mm)							Pressione Esercizio
	LL	L	S		L1	L2	L3	L4	CH1	CH2	G	bar
OM95-22LR		L		22	26	16	44	27.5	27	36	3/4"	160
OM95-28LR		L		28	30	18	47	30.5	36	41	1"	160
OM95-35LR		L		35	34	20	56	34.5	41	50	1 1/4"	160
OM95-42LR		L		42	39	22	63	40	50	60	1 1/2"	160
OM95-20SR			S	20	26	16	48	26.5	27	36	3/4"	315
OM95-25SR			S	25	30	18	54	31	36	46	1"	315
OM95-30SR			S	30	34	20	62	35.5	41	50	1 1/4"	315
OM95-38SR			S	38	39	22	72	41	50	60	1 1/2"	315

© Copyright by O.M. Oleodinamica srl - Jesi

OM95

RACCORDO DI ESTREMITA' A GOMITO - Filetto Metrico Cilindrico

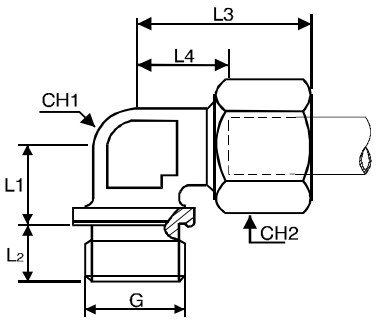

CODICE CARBONIO	SERIE			Ø tubo	Dimensioni (mm)							Pressione Esercizio
	LL	L	S		L1	L2	L3	L4	CH1	CH2	G	bar
OM95-22LM		L		22	26	16	44	27.5	27	36	26X1,5	160
OM95-28LM		L		28	30	18	47	30.5	36	41	33X2	160
OM95-35LM		L		35	34	20	56	34.5	41	50	42X2	160
OM95-42LM		L		42	39	22	63	40	50	60	48X2	160
OM95-20SM			S	20	26	16	48	26.5	27	36	27X2	315
OM95-25SM			S	25	30	18	54	31	36	46	33X2	315
OM95-30SM			S	30	34	20	62	35.5	41	50	42X2	315
OM95-38SM			S	38	39	22	72	41	50	60	48X2	315

© Copyright by O.M. Oleodinamica srl - Jesi

OM96

RACCORDO DI ESTREMITA' A "T" - Filetto Gas Conico

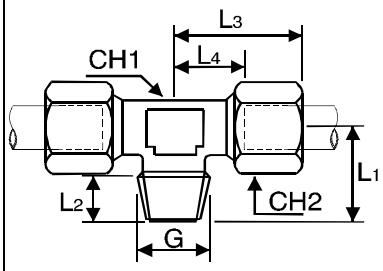

CODICE CARBONIO	SERIE			Ø tubo	Dimensioni (mm)							Pressione Esercizio
	LL	L	S		L1	L2	L3	L4	CH1	CH2	G	bar
OM96-4LLR	LL			4	17	8	21	11	7	10	1/8"	100
OM96-6LLR	LL			6	17	8	21	9.5	9	12	1/8"	100
OM96-8LLR	LL			8	20	8	23	11.5	12	14	1/8"	100
OM96-10LLR	LL			10	25.5	12	27	15	14	17	1/4"	100
OM96-12LLR	LL			12	23	12	25	13	17	19	1/4"	100
OM96-6LR		L		6	20	8	27	12	12	14	1/8"	315
OM96-8LR		L		8	26	12	29	14	12	17	1/4"	315
OM96-10LR		L		10	27	12	30	15	14	19	1/4"	315
OM96-12LR		L		12	28	12	32	17	17	22	3/8"	315
OM96-15LR		L		15	34	14	36	21	19	27	1/2"	315
OM96-18LR		L		18	36	14	40	23.5	24	32	1/2"	315
OM96-22LR		L		22	42	16	44	27.5	27	36	3/4"	160
OM96-28LR		L		28	48	18	47	30.5	36	41	1"	160
OM96-35LR		L		35	54	20	56	34.5	41	50	1 1/4"	160
OM96-42LR		L		42	61	22	63	40	50	60	1 1/2"	160
OM96-6SR			S	6	28	12	31	16	12	17	1/4"	630
OM96-8SR			S	8	27	12	32	17	14	19	1/4"	630
OM96-10SR			S	10	28	12	34	17.5	17	22	3/8"	630
OM96-12SR			S	12	31	12	38	21.5	17	24	3/8"	630
OM96-14SR			S	14	32	14	40	22	19	27	1/2"	630
OM96-16SR			S	16	32	14	43	24.5	24	30	1/2"	400
OM96-20SR			S	20	42	16	48	26.5	27	36	3/4"	400
OM96-25SR			S	25	48	18	54	30	36	46	1"	400
OM96-30SR			S	30	54	20	62	35.5	41	54	1 1/4"	400
OM96-38SR			S	38	61	22	72	41	50	61	1 1/2"	315

© Copyright by O.M. Oleodinamica srl - Jesi

OM96

RACCORDO DI ESTREMITA' A "T" - Filetto Metrico Conico

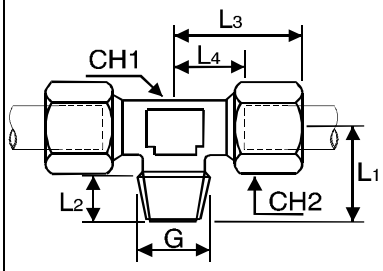

CODICE	SERIE			Ø tubo	Dimensioni (mm)							Pressione Esercizio
	LL	L	S		L1	L2	L3	L4	CH1	CH2	G	bar
OM96-4LLM	LL			4	17	8	21	11	7	10	8X1	100
OM96-6LLM	LL			6	17	8	21	9.5	9	12	10X1	100
OM96-8LLM	LL			8	20	8	23	11.5	12	14	10X1	100
OM96-6LM		L		6	20	8	27	12	12	14	10X1	315
OM96-8LM		L		8	26	12	29	14	12	17	12X1,5	315
OM96-10LM		L		10	27	12	30	15	14	19	14X1,5	315
OM96-12LM		L		12	28	12	32	17	17	22	16X1,5	315
OM96-15LM		L		15	34	14	36	21	19	27	18X1,5	315
OM96-18LM		L		18	36	14	40	23.5	24	32	22X1,5	315
OM96-6SM			S	6	28	12	31	16	12	17	12X1,5	630
OM96-8SM			S	8	27	12	32	17	14	19	14X1,5	630
OM96-10SM			S	10	28	12	34	17.5	17	22	16X1,5	630
OM96-12SM			S	12	31	12	38	21.5	17	24	18X1,5	630
OM96-14SM			S	14	32	14	40	22	19	27	20X1,5	630
OM96-16SM			S	16	32	14	43	24.5	24	30	22X1,5	630

© Copyright by O.M. Oleodinamica srl - Jesi

OM96

RACCORDO DI ESTREMITA' A "T" - Filetto NPTF

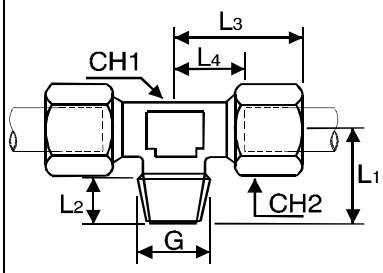

CODICE	SERIE			Ø tubo	Dimensioni (mm)							Pressione Esercizio
	LL	L	S		L1	L2	L3	L4	CH1	CH2	G	bar
OM96-4LLNPT	LL			4	17	8	21	11	7	10	1/8"	100
OM96-6LLNPT	LL			6	17	8	21	9.5	9	12	1/8"	100
OM96-8LLNPT	LL			8	20	8	23	11.5	12	14	1/8"	100
OM96-6LNPT		L		6	20	8	27	12	12	14	1/8"	315
OM96-8LNPT		L		8	26	12	29	14	12	17	1/4"	315
OM96-10LNPT		L		10	27	12	30	15	14	19	1/4"	315
OM96-12LNPT		L		12	28	12	32	17	17	22	3/8"	315
OM96-15LNPT		L		15	34	14	36	21	19	27	1/2"	315
OM96-18LNPT		L		18	36	14	40	23.5	24	32	1/2"	315
OM96-22LNPT		L		22	42	16	44	27.5	27	27	3/4"	160
OM96-28LNPT		L		28	48	18	47	30.5	36	41	1"	160
OM96-35LNPT		L		35	54	20	56	34.5	41	50	1 1/4"	160
OM96-42LNPT		L		42	61	22	63	40	50	60	1 1/2"	160
OM96-6SNPT			S	6	28	12	31	16	12	17	1/4"	630
OM96-8SNPT			S	8	27	12	32	17	14	19	1/4"	630
OM96-10SNPT			S	10	28	12	34	17.5	17	22	3/8"	630
OM96-12SNPT			S	12	31	12	38	21.5	17	24	3/8"	630
OM96-14SNPT			S	14	32	14	40	22	19	27	1/2"	630
OM96-16SNPT			S	16	32	14	43	24.5	24	30	1/2"	400
OM96-20SNPT			S	20	42	16	48	26.5	27	36	3/4"	400
OM96-25SNPT			S	25	48	18	54	30	36	46	1"	400
OM96-30SNPT			S	30	54	20	62	35.5	41	50	1 1/4"	400
OM96-38SNPT			S	38	61	22	72	41	50	60	1 1/2"	315

© Copyright by O.M. Oleodinamica srl - Jesi

OM97

RACCORDO DI ESTREMITA' A "T" - Filetto Gas Cilindrico

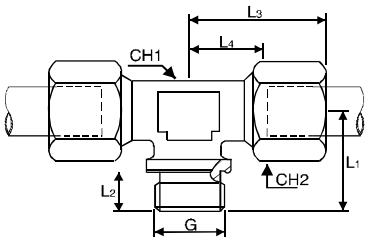

CODICE	SERIE			Ø tubo	Dimensioni (mm)							Pressione Esercizio
	LL	L	S		L1	L2	L3	L4	CH1	CH2	G	bar
OM97-22LR		L		22	26	16	44	27.5	27	36	3/4"	160
OM97-28LR		L		28	30	18	47	30.5	36	41	1"	160
OM97-35LR		L		35	34	20	56	34.5	41	50	1 1/4"	160
OM97-42LR		L		42	39	22	63	40	50	60	1 1/2"	160
OM97-20SR			S	20	26	16	48	26.5	27	36	3/4"	400
OM97-25SR			S	25	30	18	54	31	36	46	1"	400
OM97-30SR			S	30	34	20	62	35.5	41	50	1 1/4"	250
OM97-38SR			S	38	39	22	72	41	50	60	1 1/2"	250

© Copyright by O.M. Oleodinamica srl - Jesi

OM97

RACCORDO DI ESTREMITA' A "T" - Filetto Metrico Cilindrico

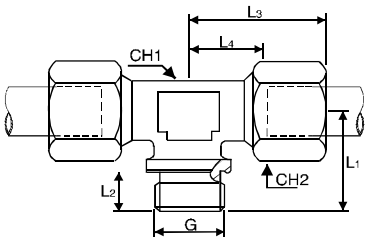

CODICE	SERIE			Ø tubo	Dimensioni (mm)							Pressione Esercizio
	LL	L	S		L1	L2	L3	L4	CH1	CH2	G	bar
OM97-22LM		L		22	26	16	44	27.5	27	36	26X1,5	160
OM97-28LM		L		28	30	18	47	30.5	36	41	33X2	160
OM97-35LM		L		35	34	20	56	34.5	41	50	42X2	160
OM97-42LM		L		42	39	22	63	40	50	60	48X2	160
OM97-20SM			S	20	26	16	48	26.5	27	36	27X2	400
OM97-25SM			S	25	30	18	54	31	36	46	33X2	400
OM97-30SM			S	30	34	20	62	35.5	41	50	42X2	250
OM97-38SM			S	38	39	22	72	41	50	60	48X2	250

© Copyright by O.M. Oleodinamica srl - Jesi

OM98

RACCORDO INTERMEDIO DIRITTO

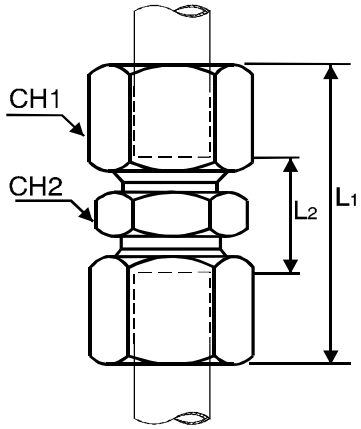

CODICE	SERIE			Ø tubo	Dimensioni (mm)							Pressione Esercizio
	LL	L	S		L1	L2	CH1	CH2				bar
OM98-4LL	LL			4	31	12	10	9				100
OM98-5LL	LL			5	32	9	12	11				100
OM98-6LL	LL			6	32	9	12	11				100
OM98-8LL	LL			8	35	12	14	12				100
OM98-10LL	LL			10	35	12	17	14				100
OM98-12LL	LL			12	35	11	19	17				100
OM98-6L		L		6	39	10	14	12				315
OM98-8L		L		8	40	11	17	14				315
OM98-10L		L		10	42	13	19	17				315
OM98-12L		L		12	43	14	22	19				315
OM98-15L		L		15	46	16	27	24				315
OM98-18L		L		18	48	16	32	27				315
OM98-22L		L		22	52	20	36	32				160
OM98-28L		L		28	54	21	41	41				160
OM98-35L		L		35	63	20	50	46				160
OM98-42L		L		42	66	21	60	55				160
OM98-6S			S	6	45	16	17	14				630
OM98-8S			S	8	47	18	19	17				630
OM98-10S			S	10	49	17	22	19				630
OM98-12S			S	12	51	19	24	22				630
OM98-14S			S	14	57	22	27	24				630
OM98-16S			S	16	57	21	30	27				400
OM98-20S			S	20	66	23	36	32				400
OM98-25S			S	25	74	26	46	41				400
OM98-30S			S	30	80	27	50	46				400
OM98-38S			S	38	90	29	60	55				315

© Copyright by O.M. Oleodinamica srl - Jesi

OM98R

RACCORDO INTERMEDIO DIRITTO RIDOTTO

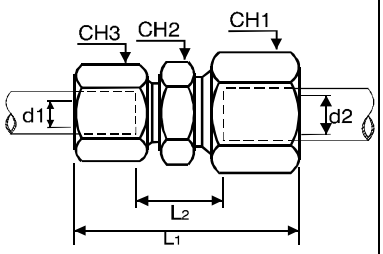

CODICE	SERIE			Ø tubo	Dimensioni (mm)							Pressione Esercizio
	LL	L	S		d1	d2	L1	L2	CH1	CH2	CH3	bar
OM98R-8/6L		L		8/6	8	6	39.5	11	17	14	14	315
OM98R-10/6L		L		10/6	10	6	40.5	11.5	19	17	14	315
OM98R-10/8L		L		10/8	10	8	41	11.5	19	17	17	315
OM98R-12/6L		L		12/6	12	6	41	12.5	22	19	14	315
OM98R-12/8L		L		12/8	12	8	41.5	12.5	22	19	17	315
OM98R-12/10L		L		12/10	12	10	42.5	13.5	22	19	19	315
OM98R-15/10L		L		15/10	15	10	44	14.5	27	24	19	315
OM98R-15/12L		L		15/12	15	12	44.5	14.5	27	24	22	315
OM98R-18/10L		L		18/10	18	10	45	15	32	27	19	315
OM98R-18/12L		L		18/12	18	12	45.5	15	32	27	22	315
OM98R-18/15L		L		18/15	18	15	47	16.5	32	27	27	315
OM98R-22/12L		L		22/12	22	12	47.5	17	36	32	22	160
OM98R-22/15L		L		22/15	22	15	49	18.5	36	32	27	160
OM98R-22/18L		L		22/18	22	18	50	18	36	32	32	160
OM98R-28/18L		L		28/18	28	18	51	19	41	41	32	160
OM98R-28/22L		L		28/22	28	22	53	21	41	41	36	160
OM98R-35/22L		L		35/22	35	22	57.5	21	50	46	36	160
OM98R-35/28S			S	35/28	35	28	58.5	21	50	46	41	160
OM98R-8/6S			S	8/6	8	6	46	18	19	17	17	630
OM98R-10/6S			S	10/6	10	6	47	17.5	22	19	17	630
OM98R-10/8S			S	10/8	10	8	48	17.5	22	19	19	630
OM98R-12/6S			S	12/6	12	6	48	18.5	24	22	17	630
OM98R-12/8S			S	12/8	12	8	49	18.5	24	22	19	630
OM98R-12/10S			S	12/10	12	10	50	18	24	22	22	630
OM98R-14/10S			S	14/10	14	10	53	20.5	27	24	22	630
OM98R-14/12S			S	14/12	14	12	54	20.5	27	24	24	630
OM98R-16/12S			S	16/12	16	12	54	21	30	27	24	400
OM98R-16/14S			S	16/14	16	14	57	22.5	30	27	27	400
OM98R-20/10S			S	20/10	20	10	57.5	23	36	32	22	400
OM98R-20/12S			S	20/12	20	12	58.5	23	36	32	24	400
OM98R-20/14S			S	20/14	20	14	61.5	24	36	32	27	400
OM98R-20/16S			S	20/16	20	16	61.5	24	36	32	30	400
OM98R-25/16S			S	25/16	25	16	65.5	27.5	46	41	30	400
OM98R-25/20S			S	25/20	25	20	70	25.5	46	41	36	400
OM98R-30/20S			S	30/20	30	20	73	28	50	46	36	400
OM98R-30/25S			S	30/25	30	25	77	28.5	50	46	46	400
OM98R-38/25S			S	38/25	38	25	82	30	60	55	46	315
OM98R-38/30S			S	38/30	38	30	85	30.5	60	55	50	315

© Copyright by O.M. Oleodinamica srl - Jesi

OM99

RACCORDO INTERMEDIO A GOMITO

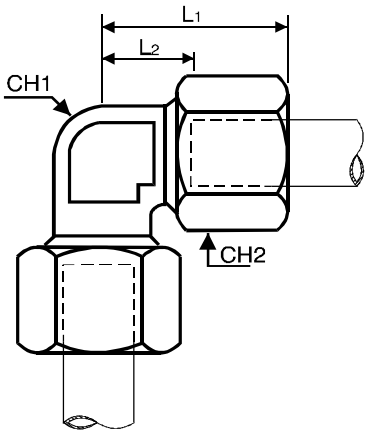

CODICE	SERIE			Ø tubo	Dimensioni (mm)							Pressione Esercizio
	LL	L	S		L1	L2	CH1	CH2				bar
OM99-4LL	LL			4	21	11	9	10				100
OM99-5LL	LL			5	21	9.5	9	12				100
OM99-6LL	LL			6	21	9.5	9	12				100
OM99-8LL	LL			8	23	11.5	12	14				100
OM99-10LL	LL			10	27	15	14	17				100
OM99-12LL	LL			12	25	13	17	19				100
OM99-6L		L		6	27	12	12	14				315
OM99-8L		L		8	29	14	12	17				315
OM99-10L		L		10	30	15	14	19				315
OM99-12L		L		12	32	17	17	22				315
OM99-15L		L		15	36	21	19	27				315
OM99-18L		L		18	40	23.5	24	32				315
OM99-22L		L		22	44	27.5	27	36				160
OM99-28L		L		28	47	30.5	36	41				160
OM99-35L		L		35	56	34.5	41	50				160
OM99-42L		L		42	63	40	50	60				160
OM99-6S			S	6	31	16	12	17				630
OM99-8S			S	8	32	17	14	19				630
OM99-10S			S	10	34	17.5	17	22				630
OM99-12S			S	12	38	21.5	17	24				630
OM99-14S			S	14	40	22	19	27				630
OM99-16S			S	16	43	24.5	24	30				400
OM99-20S			S	20	48	26.5	27	36				400
OM99-25S			S	25	54	30	36	46				400
OM99-30S			S	30	62	35.5	41	50				400
OM99-38S			S	38	72	41	50	60				315

© Copyright by O.M. Oleodinamica srl - Jesi

OM100

RACCORDO INTERMEDIO A "T"

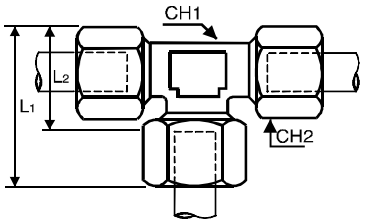

CODICE	SERIE			Ø tubo	Dimensioni (mm)							Pressione Esercizio
	LL	L	S		L1	L2	CH1	CH2				bar
OM100-4LL	LL			4	21	11	9	10				100
OM100-6LL	LL			6	21	9.5	9	12				100
OM100-8LL	LL			8	23	11.5	12	14				100
OM100-10LL	LL			10	27	15	14	17				100
OM100-12LL	LL			12	25	13	17	19				100
OM100-6L		L		6	27	12	12	14				315
OM100-8L		L		8	29	14	12	17				315
OM100-10L		L		10	30	15	14	19				315
OM100-12L		L		12	32	17	17	22				315
OM100-15L		L		15	36	21	19	27				315
OM100-18L		L		18	40	23.5	24	32				315
OM100-22L		L		22	44	27.5	27	36				160
OM100-28L		L		28	47	30.5	36	41				160
OM100-35L		L		35	56	34.5	41	50				160
OM100-42L		L		42	63	40	50	60				160
OM100-6S			S	6	31	16	12	17				630
OM100-8S			S	8	32	17	14	19				630
OM100-10S			S	10	34	17.5	17	22				630
OM100-12S			S	12	38	21.5	17	24				630
OM100-14S			S	14	40	22	19	27				630
OM100-16S			S	16	43	24.5	24	30				400
OM100-20S			S	20	48	26.5	27	36				400
OM100-25S			S	25	54	30	36	46				400
OM100-30S			S	30	62	35.5	41	50				400
OM100-38S			S	38	72	41	50	60				315

© Copyright by O.M. Oleodinamica srl - Jesi

OM101

RACCORDO INTERMEDIO A CROCE

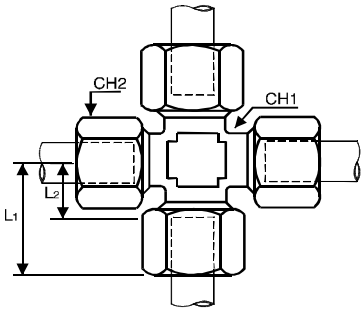

CODICE	SERIE			Ø tubo	Dimensioni (mm)							Pressione Esercizio
	LL	L	S		L1	L2			CH1	CH2		bar
OM101-4LL	LL			4	21	11			9	10		100
OM101-6LL	LL			6	21	9.5			9	12		100
OM101-8LL	LL			8	23	11.5			12	14		100
OM101-6L		L		6	27	12			12	14		315
OM101-8L		L		8	29	14			12	17		315
OM101-10L		L		10	30	15			14	19		315
OM101-12L		L		12	32	17			17	22		315
OM101-15L		L		15	36	21			19	27		315
OM101-18L		L		18	40	23.5			24	32		315
OM101-22L		L		22	44	27			27	36		160
OM101-28L		L		28	47	30.5			36	41		160
OM101-35L		L		35	56	34.5			41	50		160
OM101-42L		L		42	63	40			50	60		160
OM101-6S			S	6	31	16			12	17		630
OM101-8S			S	8	32	17			14	19		630
OM101-10S			S	10	34	17.5			17	22		630
OM101-12S			S	12	38	21.5			17	24		630
OM101-14S			S	14	40	22			19	27		630
OM101-16S			S	16	43	24.5			24	30		400
OM101-20S			S	20	48	26.5			27	36		400
OM101-25S			S	25	54	30			36	46		400
OM101-30S			S	30	62	35.5			41	50		400
OM101-38S			S	38	72	41			50	60		315

© Copyright by O.M. Oleodinamica srl - Jesi

OM102

RACCORDO PASSAPARETE DIRITTO

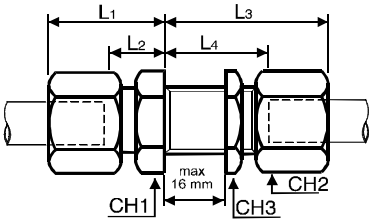

CODICE	SERIE			Ø tubo	Dimensioni (mm)							Pressione Esercizio
	LL	L	S		L1	L2	L3	L4	CH1	CH2	CH3	bar
OM102-6L		L		6	22	7	42	27	17	14	17	100
OM102-8L		L		8	23	8	42	27	19	17	19	100
OM102-10L		L		10	25	10	43	28	22	19	22	100
OM102-12L		L		12	25	10	44	29	24	22	24	100
OM102-15L		L		15	27	12	46	31	27	27	30	100
OM102-18L		L		18	30	13.5	49	32.5	32	32	36	100
OM102-22L		L		22	33	16.5	51	34.5	36	36	41	160
OM102-28L		L		28	35	18.5	52	35.5	41	41	46	160
OM102-35L		L		35	40	18.5	58	36.5	50	50	55	160
OM102-42L		L		42	42	19	59	36	60	60	65	160
OM102-6S			S	6	27	12	44	29	19	17	19	630
OM102-8S			S	8	28	13	44	29	22	19	22	630
OM102-10S			S	10	31	14.5	46	29.5	24	22	24	630
OM102-12S			S	12	31	14.5	47	30.5	27	24	27	630
OM102-14S			S	14	35	17	50	32	30	27	30	630
OM102-16S			S	16	35	16.5	50	31.5	32	30	32	400
OM102-20S			S	20	39	17.5	55	33.5	41	36	41	400
OM102-25S			S	25	44	20	56	35	46	46	46	400
OM102-30S			S	30	48	21.5	64	37.5	50	50	50	400
OM102-38S			S	38	53	22	68	37	65	60	65	315

© Copyright by O.M. Oleodinamica srl - Jesi

OM103

RACCORDO PER MANOMETRO

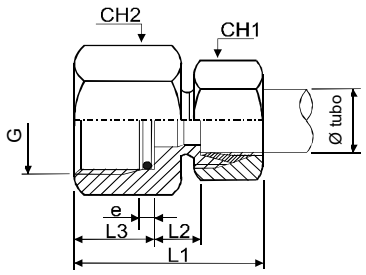

CODICE	SERIE			Ø tubo	Dimensioni (mm)							Pressione Esercizio
	LL	L	S		L1	L2	L3	e	CH1	CH2	G	Bar
OM103-6L		L		6	37	7.5	14.5	4.5	14	19	1/4"	315
OM103-8L		L		8	37	7.5	14.5	4.5	17	19	1/4"	315
OM103-10L		L		10	38	8.5	14.5	4.5	19	19	1/4"	315
OM103-12L		L		12	38	8.5	14.5	4.5	22	19	1/4"	315
OM103-6L		L		6	46	11	20	5	17	27	1/2"	630
OM103-8L		L		8	46	11	20	5	19	27	1/2"	630
OM103-10L		L		10	47	10.5	20	5	22	27	1/2"	630
OM103-12L		L		12	47	10.5	20	5	24	27	1/2"	630

© Copyright by O.M. Oleodinamica srl - Jesi

OM111

RACCORDO AD OCCHIO - Filetto Gas Cilindrico

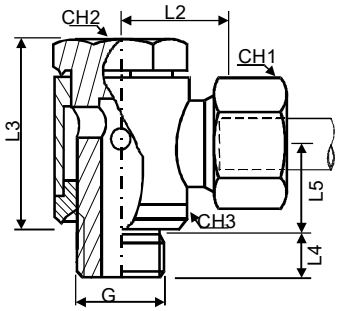

CODICE	SERIE			Ø tubo	Dimensioni (mm)									Pressione Esercizio
	LL	L	S		*	L2	L3	L4	L5	CH1	CH2	CH3	CH3	bar
OM111-4LLR	LL			4	R	13	22	6	10	10	14	18	18	100
OM111-6LLR	LL			6	R	11.5	22	6	10	12	14	18	18	100
OM111-8LLR	LL			8	R	12.5	22	6	10	14	14	18	18	100
OM111-6LR		L		6	R	12	22	6	10	14	14	18	18	315
OM111-8LR		L		8	R	14	30.5	12	15.5	17	19	22	22	315
OM111-10LR		L		10	R	15	30.5	12	15.5	19	19	22	22	315
OM111-12LR		L		12	Q	17.5	38.5	12	18	22	24	30	30	315
OM111-15LR		L		15	R	21	44.5	14	20	27	27	32	32	315
OM111-18LR		L		18	R	20.5	44.5	14	20	32	27	32	32	315
OM111-22LR		L		22	Q	24.5	53	16	24	36	32	41	41	160
OM111-28LR		L		28	R	29.5	64	18	29	41	41	52	52	160
OM111-35LR		L		35	R	35.5	79	20	36	50	50	62	62	160
OM111-42LR		L		42	Q	40	90	22	41.5	60	55	70	70	160
OM111-6SR			S	6	R	16	30.5	12	15.5	17	19	22	22	400
OM111-8SR			S	8	R	16	30.5	12	15.5	19	19	22	22	400
OM111-10SR			S	10	Q	18	38.5	12	18	22	24	30	30	400
OM111-12SR			S	12	Q	18	38.5	12	18	24	24	30	30	400
OM111-14SR			S	14	R	24	45.5	14	21	27	27	36	36	400
OM111-16SR			S	16	R	23.5	45.5	14	21	30	27	36	36	400
OM111-20SR			S	20	Q	28.5	61	16	28	36	32	41	41	400
OM111-25SR			S	25	R	31	68	18	31	46	41	52	52	250
OM111-30SR			S	30	R	36.5	79	20	36.5	50	50	62	62	250
OM111-38SR			S	38	Q	41	90	22	41.5	60	55	70	70	250

*Q= Corpo quadrato R= corpo rotondo

© Copyright by O.M. Oleodinamica srl - Jesi

OM111

RACCORDO AD OCCHIO

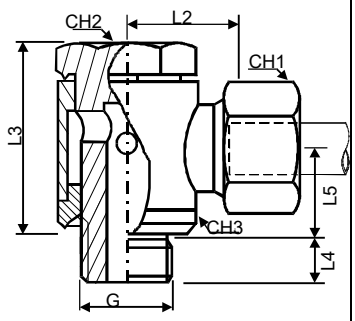

CODICE	SERIE			Ø tubo	Dimensioni (mm)									Pressione Esercizio
	LL	L	S		*	L2	L3	L4	L5	CH1	CH2	CH3	G	bar
OM111-4LLM	LL			4	R	13	22	6	10	10	14	18	8X1	100
OM111-6LLM	LL			6	R	11.5	22	6	10	12	14	18	10X1	100
OM111-8LLM	LL			8	R	12.5	22	6	10	14	14	18	10X1	100
OM111-6LM		L		6	R	12	22	6	10	14	14	18	10X1	315
OM111-8LM		L		8	R	14	30.5	12	15.5	17	19	22	12X1,5	315
OM111-10LM		L		10	R	15	30.5	12	15.5	19	19	22	14X1,5	315
OM111-12LM		L		12	Q	17.5	38.5	12	18	22	24	30	16X1,5	315
OM111-15LM		L		15	R	21	44.5	14	20	27	27	32	18X1,5	315
OM111-18LM		L		18	R	20.5	44.5	14	20	32	27	32	22X1,5	315
OM111-22LM		L		22	Q	24.5	53	16	24	36	32	41	26X1,5	160
OM111-28LM		L		28	R	29.5	64	18	29	41	41	52	33X2	160
OM111-35LM		L		35	R	35.5	79	20	36	50	50	62	42X2	160
OM111-42LM		L		42	Q	40	90	22	41.5	60	55	70	48X2	160
OM111-6SM			S	6	R	16	30.5	12	15.5	17	19	22	12X1,5	400
OM111-8SM			S	8	R	16	30.5	12	15.5	19	19	22	14X1,5	400
OM111-10SM			S	10	Q	18	38.5	12	18	22	24	30	16X1,5	400
OM111-12SM			S	12	Q	18	38.5	12	18	24	24	30	18X1,5	400
OM111-14SM			S	14	R	24	45.5	14	21	27	27	36	20X1,5	400
OM111-16SM			S	16	R	23.5	45.5	14	21	30	27	36	22X1,5	400
OM111-20SM			S	20	Q	28.5	61	16	28	36	32	41	27X2	400
OM111-25SM			S	25	R	31	68	18	31	46	41	52	33X2	250
OM111-30SM			S	30	R	36.5	79	20	36.5	50	50	62	42X2	250
OM111-38SM			S	38	Q	41	90	22	41.5	60	55	70	48X2	250

* R=Corpo Rotondo Q=corpo quadrato

© Copyright by O.M. Oleodinamica srl - Jesi

OM111GG

RACCORDO AD OCCHIO CON GUARNIZIONE PIANA -Filetto Gas Cilindrico

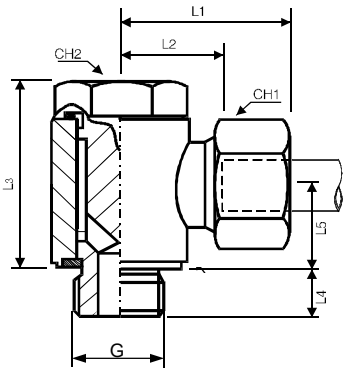

CODICE	SERIE			Ø tubo	Dimensioni (mm)									Pressione Esercizio
	LL	L	S		*	L1	L2	L3	L4	L5	CH1	CH2	G	bar
OM111GG-4LLR	LL			4	R	25	15	24	8	11	10	17	1/8"	100
OM111GG-6LLR	LL			6	R	25	13.5	24	8	11	12	17	1/8"	100
OM111GG-8LLR	LL			8	R	25	13.5	24	8	11	14	17	1/8"	100
OM111GG-6LR		L		6	R	27	12	24	8	11	14	17	1/8"	315
OM111GG-8LR		L		8	R	29	14.5	32	12	14	17	19	1/4"	315
OM111GG-10LR		L		10	R	30	15.5	32	12	14	19	19	1/4"	315
OM111GG-12LR		L		12	Q	33	18	38	12	17	22	24	3/8"	315
OM111GG-15LR		L		15	R	37	21.5	46	14	22	27	30	1/2"	315
OM111GG-18LR		L		18	R	37	21.5	46	14	22	32	30	1/2"	315
OM111GG-22LR		L		22	Q	44	27.5	54	16	24	36	36	3/4"	160
OM111GG-28LR		L		28	R	49	32	66	18	31	41	46	1"	160
OM111GG-35LR		L		35	R	58	36	80	20	36	50	55	1 1/4"	160
OM111GG-42LR		L		42	Q	63	40.5	90	22	41	60	60	1 1/2"	160
OM111GG-6SR			S	6	R	31	16.5	32	12	14	17	19	1/4"	400
OM111GG-8SR			S	8	R	31	16.5	32	12	14	19	19	1/4"	400
OM111GG-10SR			S	10	Q	35	18.5	38	12	17	22	24	3/8"	400
OM111GG-12SR			S	12	Q	35	18.5	38	12	17	24	24	3/8"	400
OM111GG-14SR			S	14	R	40	22.5	46	14	22	27	30	1/2"	400
OM111GG-16SR			S	16	R	40	22	46	14	22	30	30	1/2"	400
OM111GG-20SR			S	20	Q	48	26.5	54	16	24	36	36	3/4"	400
OM111GG-25SR			S	25	R	56	31.5	66	18	31	46	46	1"	250
OM111GG-30SR			S	30	R	64	37	80	20	36	50	55	1 1/4"	250
OM111GG-38SR			S	38	Q	72	41.5	90	22	41	60	60	1 1/2"	250

* Q=corpo quadrato R=corpo tondo

© Copyright by O.M. Oleodinamica srl - Jesi

OM111GG

RACCORDO AD OCCHIO CON GUARNIZIONE PIANA -Filetto Metrico Cilindrico

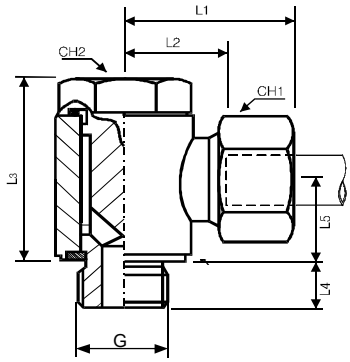

CODICE	SERIE			Ø tubo	Dimensioni (mm)									Pressione Esercizio
	LL	L	S		*	L1	L2	L3	L4	L5	CH1	CH2	G	bar
OM111GG-4LLM	LL			4	R	25	15	24	8	10.5	10	14	8X1	100
OM111GG-6LLM	LL			6	R	25	13.5	24	8	10.5	12	17	10X1	100
OM111GG-8LLM	LL			8	R	25	13.5	24	8	10.5	14	17	10X1	100
OM111GG-6LM		L		6	R	27	12	24	8	10.5	14	17	10X1	315
OM111GG-8LM		L		8	R	29	14.5	32	12	14	17	19	12X1,5	315
OM111GG-10LM		L		10	R	30	15.5	32	12	14	19	19	14X1,5	315
OM111GG-12LM		L		12	Q	33	18	38	12	16.5	22	24	16X1,5	315
OM111GG-15LM		L		15	R	37	21.5	46	14	21.5	27	27	18X1,5	315
OM111GG-18LM		L		18	R	37	21.5	46	14	21.5	32	30	22X1,5	315
OM111GG-22LM		L		22	Q	44	27.5	54	16	24	36	36	26X1,5	160
OM111GG-28LM		L		28	R	49	32	66	18	30.5	41	46	33X2	160
OM111GG-35LM		L		35	R	58	36	80	20	35.5	50	55	42X2	160
OM111GG-42LM		L		42	Q	63	40.5	90	22	40.5	60	60	48X2	160
OM111GG-6SM			S	6	R	31	16.5	32	12	14	17	19	12X1,5	400
OM111GG-8SM			S	8	R	31	16.5	32	12	14	19	19	14X1,5	400
OM111GG-10SM			S	10	Q	35	18.5	38	12	16.5	22	24	16X1,5	400
OM111GG-12SM			S	12	Q	35	18.5	38	12	16.5	24	24	18X1,5	400
OM111GG-14SM			S	14	R	40	22.5	46	14	21.5	27	30	20X1,5	400
OM111GG-16SM			S	16	R	40	22	46	14	21.5	30	30	22X1,5	400
OM111GG-20SM			S	20	Q	48	26.5	54	16	24	36	36	27X2	400
OM111GG-25SM			S	25	R	56	31.5	66	18	30.5	46	46	33X7	250
OM111GG-30SM			S	30	R	64	37	80	20	35.5	50	55	42X2	250
OM111GG-38SM			S	38	Q	72	41.5	90	22	40.5	60	60	48X2	250

*q= corpo quadrato R=corpo rotondo

© Copyright by O.M. Oleodinamica srl - Jesi

OM114

RACCORDO COMBINATO ORIENTABILE A GOMITO - Filetto Gas Cilindrico

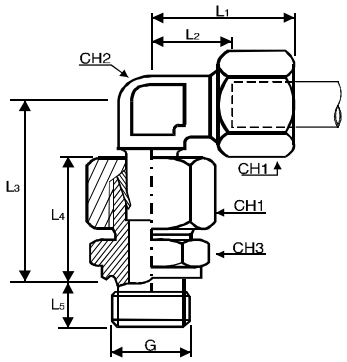

CODICE	SERIE			Ø tubo	Dimensioni (mm)								Pressione Esercizio
	LL	L	S		L1	L2	L3	L4	L5	CH1	CH2	G	Bar
OM114-6LR		L		6	27	12	34.5	23	8	14	12	1/8"	100
OM114-8LR		L		8	29	14	37.5	25	12	17	12	1/4"	100
OM114-10LR		L		10	30	15	40	26	12	19	14	1/4"	100
OM114-12LR		L		12	32	17	42	27	12	22	17	3/8"	100
OM114-15LR		L		15	36	21	46.5	29	14	27	19	1/2"	100
OM114-18LR		L		18	40	23.5	50	31	14	32	24	1/2"	315
OM114-22LR		L		22	44	27.5	55	33	16	36	27	3/4"	315
OM114-28LR		L		28	47	30.5	59	34	18	41	36	3/4"	315
OM114-35LR		L		35	56	34.5	68.5	39	20	50	41	3/4"	315
OM114-42LR		L		42	63	40	79	42	22	60	50	3/4"	315
OM114-6SR			S	6	31	16	40	28	12	17	12	3/4"	315
OM114-8SR			S	8	32	17	42.5	30	12	19	14	3/4"	160
OM114-10SR			S	10	34	17.5	45	31	12	22	17	3/4"	160
OM114-12SR			S	12	38	21.5	48	33	12	24	17	3/4"	160
OM114-14SR			S	14	40	22	54	37	14	27	19	3/4"	160
OM114-16SR			S	16	43	24.5	55	37	14	30	24	3/4"	630
OM114-20SR			S	20	48	26.5	65	42	16	36	27	3/4"	630
OM114-25SR			S	25	54	30	73	47	18	46	36	3/4"	630
OM114-30SR			S	30	62	35.5	78.5	50	20	50	41	3/4"	630
OM114-38SR			S	38	72	41	90.5	57	22	60	50	3/4"	630

© Copyright by O.M. Oleodinamica srl - Jesi

OM115

RACCORDO COMBINATO A "T" ORIENTABILE CENTRALE - Filetto Gas Cilindrico

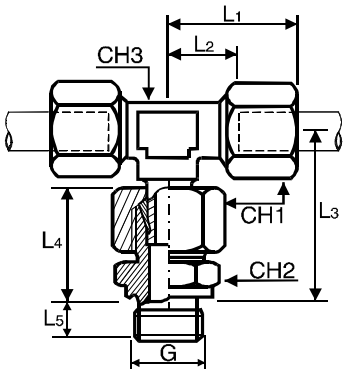

CODICE	SERIE			Ø tubo	Dimensioni (mm)									Pressione Esercizio
	LL	L	S		L1	L2	L3	L4	L5	CH1	CH2	CH3	G	bar
OM115-6LR		L		6	27	12	34.5	23	8	14	14	12	1/8"	315
OM115-8LR		L		8	29	14	37.5	25	12	17	19	12	1/4"	315
OM115-10LR		L		10	30	15	40	26	12	19	19	14	1/4"	315
OM115-12LR		L		12	32	17	42	27	12	22	22	17	3/8"	315
OM115-15LR		L		15	36	21	46.5	29	14	27	27	19	1/2"	315
OM115-18LR		L		18	40	23.5	50	31	14	32	27	24	1/2"	315
OM115-22LR		L		22	44	27.5	55	33	16	36	32	27	3/4"	160
OM115-28LR		L		28	47	30.5	59	34	18	41	41	36	1"	160
OM115-35LR		L		35	56	34.5	68.5	39	20	50	50	41	1 1/4"	160
OM115-42LR		L		42	63	40	79	42	22	60	55	50	1 1/2"	160
OM115-6SR			S	6	31	16	40	28	12	17	19	12	1/4"	630
OM115-8SR			S	8	32	17	42.5	30	12	19	19	14	1/4"	630
OM115-10SR			S	10	34	17.5	45	31	12	22	22	17	3/8"	630
OM115-12SR			S	12	38	21.5	48	33	12	24	22	17	3/8"	630
OM115-14SR			S	14	40	22	54	37	14	27	27	19	1/2"	630
OM115-16SR			S	16	43	24.5	55	37	14	30	27	24	1/2"	400
OM115-20SR			S	20	48	26.5	65	42	16	36	32	27	3/4"	400
OM115-25SR			S	25	54	30	73	47	18	46	41	36	1"	400
OM115-30SR			S	30	62	35.5	78.5	50	20	50	50	41	1 1/4"	250
OM115-38SR			S	38	72	41	90	57	22	60	55	50	1 1/2"	250

© Copyright by O.M. Oleodinamica srl - Jesi

OM115

RACCORDO COMBINATO A "T" ORIENTABILE CENTRALE - Filetto Metrico Cilindrico

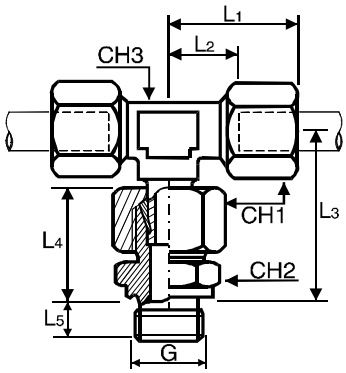

CODICE	SERIE			Ø tubo	Dimensioni (mm)									Pressione Esercizio
	LL	L	S		L1	L2	L3	L4	L5	CH1	CH2	CH3	G	bar
OM115-6LM		L		6	27	12	34.5	23	8	14	14	12	10X1	315
OM115-8LM		L		8	29	14	37.8	25	12	17	17	12	12X1,5	315
OM115-10LM		L		10	30	15	40	26	12	19	19	14	14X1,5	315
OM115-12LM		L		12	32	17	42	27	12	22	22	17	16X1,5	315
OM115-15LM		L		15	36	21	46.5	29	14	27	24	19	18X1,5	315
OM115-18LM		L		18	40	23.5	50	31	14	32	27	24	22X1,5	315
OM115-22LM		L		22	44	27.5	55	33	16	36	32	27	26X1,5	160
OM115-28LM		L		28	47	30.5	59	34	18	41	41	36	33X2	160
OM115-35LM		L		35	56	34.5	68.5	39	20	50	50	41	42X2	160
OM115-42LM		L		42	63	40	79	42	22	60	55	50	48X2	160
OM115-6SM			S	6	31	16	40	28	12	17	17	12	12X1,5	630
OM115-8SM			S	8	32	17	42.5	30	12	19	19	14	14X1,5	630
OM115-10SM			S	10	34	17.5	45	31	12	22	22	17	16X1,5	630
OM115-12SM			S	12	38	21.5	48	33	12	24	24	17	18X1,5	630
OM115-14SM			S	14	40	22	54	37	14	27	27	19	20X1,5	630
OM115-16SM			S	16	43	24.5	55	37	14	30	27	24	22X1,5	400
OM115-20SM			S	20	48	26.5	65	42	16	36	32	27	27X2	400
OM115-25SM			S	25	54	30	73	47	18	46	41	36	33X2	400
OM115-30SM			S	30	62	35.5	78.5	50	20	50	50	41	42X2	250
OM115-38SM			S	38	72	41	90.5	57	22	60	55	50	48X2	250

© Copyright by O.M. Oleodinamica srl - Jesi

OM116

RACCORDO COMBINATO ORIENTABILE A "T" LATERALE - Filetto Gas Cilindrico

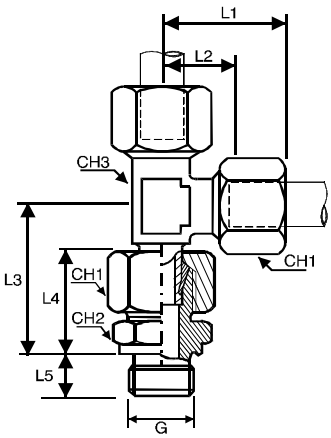

CODICE	SERIE			Ø tubo	Dimensioni (mm)									Pressione Esercizio
	LL	L	S		L1	L2	L3	L4	L5	CH1	CH2	CH3	G	bar
OM116-6LR		L		6	27	12	34.5	23	8	14	14	12	1/8"	315
OM116-8LR		L		8	29	14	37.5	25	12	17	19	12	1/4"	315
OM116-10LR		L		10	30	15	40	26	12	19	19	14	1/4"	315
OM116-12LR		L		12	32	17	42	27	12	22	22	17	3/8"	315
OM116-15LR		L		15	36	21	46.5	29	14	27	27	19	1/2"	315
OM116-18LR		L		18	40	23.5	50	31	14	32	27	24	1/2"	315
OM116-22LR		L		22	44	27.5	55	33	16	36	32	27	3/4"	160
OM116-28LR		L		28	47	30.5	59	34	18	41	41	36	1"	160
OM116-35LR		L		35	56	34.5	68.5	39	20	50	50	41	1 1/4"	160
OM116-42LR		L		42	63	40	79	42	22	60	55	50	1 1/2"	160
OM116-6SR			S	6	31	16	40	28	12	17	19	12	1/4"	630
OM116-8SR			S	8	32	17	42.5	30	12	19	19	14	1/4"	630
OM116-10SR			S	10	34	17.5	45	31	12	22	22	17	3/8"	630
OM116-12SR			S	12	38	21.5	48	33	12	24	22	17	3/8"	630
OM116-14SR			S	14	40	22	54	37	14	27	27	19	1/2"	630
OM116-16SR			S	16	43	24.5	55	37	14	30	27	24	1/2"	400
OM116-20SR			S	20	48	26.5	65	42	16	36	32	27	3/4"	400
OM116-25SR			S	25	54	30	73	47	18	46	41	36	1"	400
OM116-30SR			S	30	62	35.5	78.5	50	20	50	50	41	1 1/4"	250
OM116-38SR			S	38	72	41	90.5	57	22	60	55	50	1 1/2"	250

© Copyright by O.M. Oleodinamica srl - Jesi

OM116

RACCORDO COMBINATO ORIENTABILE A "T" LATERALE - Filetto Metrico Cilindrico

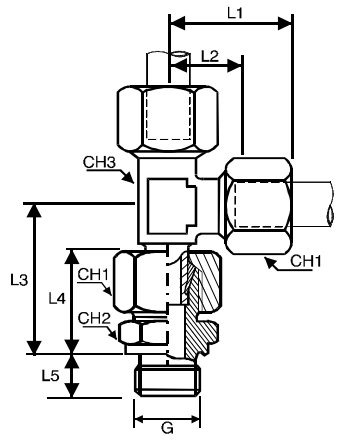

CODICE CARBONIO	SERIE			Ø tubo	Dimensioni (mm)									Pressione Esercizio
	LL	L	S		L1	L2	L3	L4	L5	CH1	CH2	CH3	G	bar
OM116-6LM		L		6	27	12	34.5	23	8	14	14	12	10X1	315
OM116-8LM		L		8	29	14	37.5	25	12	17	17	12	12X1,5	315
OM116-10LM		L		10	30	15	40	26	12	19	19	14	14X1,5	315
OM116-12LM		L		12	32	17	42	27	12	22	22	17	16X1,5	315
OM116-15LM		L		15	36	21	46.5	29	14	27	24	19	18X1,5	315
OM116-18LM		L		18	40	23.5	50	31	14	32	27	24	22X1,5	315
OM116-22LM		L		22	44	27.5	55	33	16	36	32	27	26X1,5	160
OM116-28LM		L		28	47	30.5	59	34	18	41	41	36	33X2	160
OM116-35LM		L		35	56	34.5	68.5	39	20	50	50	41	42X2	160
OM116-42LM		L		42	63	40	79	42	22	60	55	50	X48X2	160
OM116-6SM			S	6	31	16	40	28	12	17	17	12	12X1,5	630
OM116-8SM			S	8	32	17	42.5	30	12	19	19	14	14X1,5	630
OM116-10SM			S	10	34	17.5	45	31	12	22	22	17	16X1,5	630
OM116-12SM			S	12	38	21.5	48	33	12	24	24	17	18X1,5	630
OM116-14SM			S	14	40	22	54	37	14	27	27	19	20X1,5	630
OM116-16SM			S	16	43	24.5	55	37	14	30	27	24	2X1,5	400
OM116-20SM			S	20	48	26.5	65	42	16	36	32	27	27X2	400
OM116-25SM			S	25	54	30	73	47	18	46	41	36	33X2	400
OM116-30SM			S	30	62	35.5	78.5	50	20	50	50	41	42X2	250
OM116-38SM			S	38	72	41	90.5	57	22	60	55	50	48X2	250

© Copyright by O.M. Oleodinamica srl - Jesi

OM117

RACCORDO PASSANTE DIRITTO

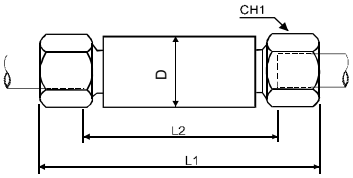

CODICE	SERIE				Dimensioni (mm)							Pressione Esercizio
	LL	L	S			D	L1	L2	CH1			bar
OM117-6L		L				18	85	56	14			315
OM117-8L		L				20	85	56	17			315
OM117-10L		L				22	87	58	19			315
OM117-12L		L				25	87	58	22			315
OM117-15L		L				28	100	70	27			315
OM117-18L		L				32	101	69	32			315
OM117-22L		L				36	105	73	36			160
OM117-28L		L				40	106	73	41			160
OM117-35L		L				50	114	71	50			160
OM117-42L		L				60	115	70	60			160
OM117-6S			S			20	89	60	17			630
OM117-8S			S			22	89	60	19			630
OM117-10S			S			25	91	59	22			630
OM117-12S			S			28	91	59	24			630
OM117-14S			S			30	107	72	27			630
OM117-16S			S			35	107	71	30			400
OM117-20S			S			38	114	71	36			400
OM117-25S			S			45	120	72	46			400
OM117-30S			S			50	126	73	50			400
OM117-38S			S			60	133	72	60			315

© Copyright by O.M. Oleodinamica srl - Jesi

OM118

RACCORDO PASSAPARETE A GOMITO

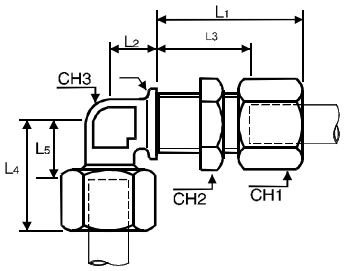

CODICE	SERIE			Ø tubo	Dimensioni (mm)									Pressione Esercizio
	LL	L	S		L1	L2	L3	L4	L5	CH1	CH2	CH3	Ø	bar
OM118-6L		L		6	42	14	27	27	12	14	17	12	17	100
OM118-8L		L		8	42	17	27	29	14	17	19	12	19	100
OM118-10L		L		10	43	18	28	30	15	19	22	14	22	100
OM118-12L		L		12	44	20	29	32	17	22	24	17	24	100
OM118-15L		L		15	46	23	31	36	21	27	30	19	27	100
OM118-18L		L		18	49	24	32.5	40	24	32	36	24	32	315
OM118-22L		L		22	51	30	34.5	44	28	36	41	27	36	315
OM118-28L		L		28	52	34	35.5	47	31	41	46	36	42	315
OM118-35L		L		35	58	39	36.5	56	35	50	55	41	50	315
OM118-42L		L		42	59	43	36	63	40	60	65	50	60	315
OM118-6S			S	6	44	17	29	31	16	17	19	12	19	315
OM118-8S			S	8	44	18	29	32	17	19	22	14	22	160
OM118-10S			S	10	46	20	29.5	34	18	22	24	17	24	160
OM118-12S			S	12	47	21	30.5	38	22	24	27	17	27	160
OM118-14S			S	14	50	23	32	40	22	27	30	19	27	160
OM118-16S			S	16	50	24	31.5	43	25	30	32	24	30	630
OM118-20S			S	20	55	30	33.5	48	27	36	41	27	36	630
OM118-25S			S	25	59	34	35	54	30	46	46	36	42	630
OM118-30S			S	30	64	39	37.5	62	36	50	50	41	50	630
OM118-38S				38	58	43	37	72	41	60	65	50	60	630

© Copyright by O.M. Oleodinamica srl - Jesi

OM119

RACCORDO ORIENTABILE A GOMITO

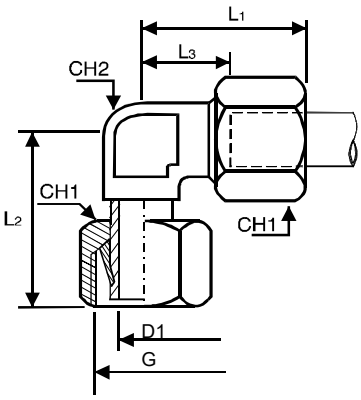

CODICE	SERIE			Ø tubo	Dimensioni (mm)							Pressione Esercizio
	LL	L	S		L1	L2	L3	D1	CH1	CH2	G	bar
OM119-6L		L		6	27	26	12	6	14	12	12X1,5	315
OM119-8L		L		8	29	27.5	14	8	17	12	14X1,5	315
OM119-10L		L		10	30	29	15	10	19	14	16X1,5	315
OM119-12L		L		12	32	29.5	17	12	22	17	18X1,5	315
OM119-15L		L		15	36	32.5	21	15	27	19	22X1,5	315
OM119-18L		L		18	40	35.5	23.5	18	32	24	26X1,5	315
OM119-22L		L		22	44	38.5	27.5	22	36	27	30X2	160
OM119-28L		L		28	47	41.5	30.5	28	41	36	36X2	160
OM119-35L		L		35	56	51	34.5	35	50	41	45X2	160
OM119-42L		L		42	63	60	40	42	60	50	52X2	160
OM119-6S			S	6	31	27	16	6	17	12	14X1,5	630
OM119-8S			S	8	32	27.5	17	8	19	14	16X1,5	630
OM119-10S			S	10	34	30	17.5	10	22	17	18X1,5	630
OM119-12S			S	12	38	31	21.5	12	24	17	20X1,5	630
OM119-14S			S	14	40	35	22	14	27	19	22X1,5	630
OM119-16S			S	16	43	36.5	24.5	16	30	24	24X1,5	400
OM119-20S			S	20	48	44.5	26.5	20	36	27	30X2	400
OM119-25S			S	25	54	50	30	25	46	36	36X2	400
OM119-30S			S	30	62	55	35.5	30	50	41	42X2	400
OM119-38S			S	38	72	64.5	41	38	60	50	52X2	315

© Copyright by O.M. Oleodinamica srl - Jesi

OM120

RACCORDO ORIENTABILE CENTRALE

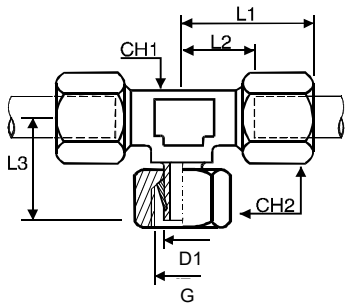

CODICE	SERIE			Ø tubo	Dimensioni (mm)								Pressione Esercizio
	LL	L	S		L1	L2	L3	D1		CH1	CH2	G	bar
OM120-6L		L		6	27	12	26	6		12	14	12X1,5	315
OM120-8L		L		8	29	14	27.5	8		12	17	14X1,5	315
OM120-10L		L		10	30	15	29	10		14	19	16X1,5	315
OM120-12L		L		12	32	17	29.5	12		17	22	18X1,5	315
OM120-15L		L		15	36	21	32.5	15		19	27	22X1,5	315
OM120-18L		L		18	40	23.5	35.5	18		24	32	26X1,5	315
OM120-22L		L		22	44	27.5	38.5	22		27	36	30X2	160
OM120-28L		L		28	47	30.5	41.5	28		36	41	36X2	160
OM120-35L		L		35	56	34.5	51	35		41	50	45X2	160
OM120-42L		L		42	63	40	60	42		50	60	52X2	160
OM120-6S			S	6	31	16	27	6		12	17	14X1,5	630
OM120-8S			S	8	32	17	27.5	8		14	19	16X1,5	630
OM120-10S			S	10	34	17.5	30	10		17	22	18X1,5	630
OM120-12S			S	12	38	21.5	31	12		17	24	20X1,5	630
OM120-14S			S	14	40	22	35	14		19	27	22X1,5	630
OM120-16S			S	16	43	24.5	36.5	16		24	30	24X1,5	400
OM120-20S			S	20	48	26.5	44.5	20		27	36	30X2	400
OM120-25S			S	25	54	30	50	25		36	46	36X2	400
OM120-30S			S	30	62	35.5	55	30		41	50	42X2	400
OM120-38S			S	38	72	41	64.5	38		50	60	52X2	315

© Copyright by O.M. Oleodinamica srl - Jesi

OM121

RACCORDO ORIENTABILE A "T" LATERALE

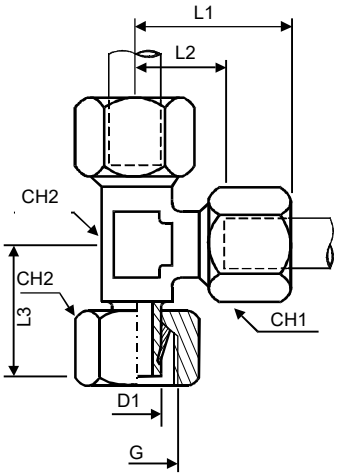

CODICE	SERIE			Ø tubo	Dimensioni (mm)								Pressione Esercizio
	LL	L	S		L1	L2	L3	D1		CH1	CH2	G	bar
OM121-6L		L		6	27	12	26	6		14	12	12X1,5	315
OM121-8L		L		8	29	14	27.5	8		17	12	14X1,5	315
OM121-10L		L		10	30	15	29	10		19	14	16X1,5	315
OM121-12L		L		12	32	17	29.5	12		22	17	18X1,5	315
OM121-15L		L		15	36	21	32.5	15		27	19	22X1,5	315
OM121-18L		L		18	40	23.5	35.5	18		32	24	26X1,5	315
OM121-22L		L		22	44	27.5	38.5	22		36	27	30X2	160
OM121-28L		L		28	47	30.5	41.5	28		41	36	36X2	160
OM121-35L		L		35	56	34.5	51	35		50	41	45X2	160
OM121-42L		L		42	63	40	60	42		60	50	52X2	160
OM121-6S			S	6	31	16	27	6		17	12	14X1,5	630
OM121-8S			S	8	32	17	27.5	8		19	14	16X1,5	630
OM121-10S			S	10	34	17.5	30	10		22	17	18X1,5	630
OM121-12S			S	12	38	21.5	31	12		24	17	20X1,5	630
OM121-14S			S	14	40	22	35	14		27	19	22X1,5	630
OM121-16S			S	16	43	24.5	36.5	16		30	24	24X1,5	400
OM121-20S			S	20	48	26.5	44.5	20		36	27	30X2	400
OM121-25S			S	25	54	30	50	47		46	36	36X2	400
OM121-30S			S	30	62	35.5	55	30		50	41	42X2	400
OM121-38S			S	38	72	41	64.5	38		60	50	52X2	315

© Copyright by O.M. Oleodinamica srl - Jesi

OM126GG

ESTREMITA' TUBOLARE PER COMBINAZIONI CON GUARNIZIONE PIANA -Filetto Gas Cilindrico e Filetto Metrilo Cilindrico

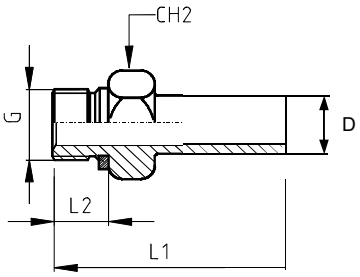

NON SERRATO

CODICE	SERIE			Ø tubo	Dimensioni (mm)							Pressione Esercizio
	LL	L	S		L1	L2	D	CH2			G	bar
OM126GG-6LR		L		6	32.5	8	6	14			1/8"	250
OM126GG-8LR		L		8	41	12	8	19			1/4"	250
OM126GG-10LR		L		10	39.5	12	10	19			1/4"	250
OM126GG-12LR		L		12	46	12	12	22			3/8"	250
OM126GG-15LR		L		15	46	14	15	27			1/2"	250
OM126GG-18LR		L		18	46.5	14	18	27			1/2"	160
OM126GG-22LR		L		22	48	16	22	32			3/4"	160
OM126GG-28LR		L		28	52.5	18	28	41			1"	100
OM126GG-35LR		L		35	60.5	20	35	50			1 1/4"	100
OM126GG-42LR		L		42	66	22	42	55			1 1/2"	100
OM126GG-6SR			S	6	39	12	6	19			1/4"	630
OM126GG-8SR			S	8	41	12	8	19			1/4"	630
OM126GG-10SR			S	10	43.5	12	10	22			3/8"	630
OM126GG-12SR			S	12	46	12	12	22			3/8"	630
OM126GG-14SR			S	14	50.5	14	14	27			1/2"	630
OM126GG-16SR			S	16	50.5	14	16	27			1/2"	400
OM126GG-20SR			S	20	59	16	20	32			3/4"	400
OM126GG-25SR			S	25	66	18	25	41			1"	400
OM126GG-30SR			S	30	71	20	30	50			1 1/4"	250
OM126GG-38SR			S	38	80	22	38	55			1 1/2"	250
MISURE SPECIALI												
OM126GG-8LR3/8"		L		8	41.5	12	8	22			3/8"	250
OM126GG-12LR1/4"		L		12	46	12	12	19			1/4"	250
OM126GG-12LR1/2"		L		12	48.5	14	12	27			1/2"	250
OM126GG-15LR3/8"		L		15	43.5	12	15	22			3/8"	250
OM126GG-22LR1/2"		L		22	47	14	22	32			1/2"	160
OM126GG-12SR1/4"			S	12	46	12	12	22			1/4"	630
OM126GG-12SR1/2"			S	12	48.5	14	12	27			1/2"	630
OM126GG-14SR3/8"			S	14	48	12	14	22			3/8"	630
OM126GG-16SR3/8"			S	16	48.5	12	16	22			3/8"	400
OM126GG-16SR3/4"			S	16	54.5	16	16	32			3/4"	400
OM126GG-25SR3/4"			S	25	64	16	25	32			3/4"	400
OM126GG-38SR11/4"			S	38	78	20	38	50			1 1/4"	250
SERIE METRICA												
OM126GG-6LM		L		6	32.5	8	6	14			10X1	315
OM126GG-8LM		L		8	38.5	12	8	17			12X1,5	315
OM126GG-10LM		L		10	39	12	10	19			14X1,5	315
OM126GG-12LM		L		12	42.5	12	12	22			16X1,5	315
OM126GG-15LM		L		15	43.5	12	15	24			18X1,5	315
OM126GG-18LM		L		18	45.5	14	18	27			22X1,5	315
OM126GG-22LM		L		22	48.5	16	22	32			26X1,5	160
OM126GG-28LM		L		28	53.5	18	28	41			33X2	160
OM126GG-35LM		L		35	62.5	20	35	50			42X2	160
OM126GG-42LM		L		42	68.5	22	42	55			48X2	160
OM126GG-6SM			S	6	39	12	6	17			12X1,5	630
OM126GG-8SM			S	8	41.5	12	8	19			14X1,5	630
OM126GG-10SM			S	10	44	12	10	22			16X1,5	630
OM126GG-12SM			S	12	46	12	12	24			18X1,5	630
OM126GG-14SM			S	14	50.5	14	14	27			20X1,5	630
OM126GG-16SM			S	16	51	14	16	27			22X1,5	400
OM126GG-20SM			S	20	59	16	20	32			27X2	400
OM126GG-25SM			S	25	66	18	25	41			33X2	400
OM126GG-30SM			S	30	71	20	30	50			42X2	400
OM126GG-38SM			S	38	82	22	38	55			48X2	315

© Copyright by O.M. Oleodinamica srl - Jesi

OM126AGG

ESTREMITA' TUBOLARE CON GUARNIZIONE SERRATA - Metrico Cilindrico

Filetto

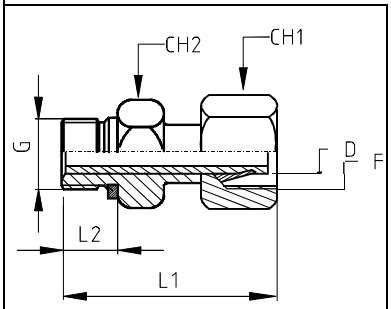

SERRATO

CODICE	SERIE			Ø tubo	Dimensioni (mm)						Pressione Esercizio
	LL	L	S		L1	L2	D	CH1	CH2	G	bar
OM126AGG-6LM		L		6	32.5	8	6	14	14	10X1	250
OM126AGG-8LM		L		8	38.5	12	8	17	17	12X1,5	250
OM126AGG-10LM		L		10	39.5	12	10	19	19	14X1,5	250
OM126AGG-12LM		L		12	42.5	12	12	22	22	16X1,5	250
OM126AGG-15LM		L		15	43.5	12	15	27	24	18X1,5	250
OM126AGG-18LM		L		18	45.5	14	18	32	27	22X1,5	160
OM126AGG-22LM		L		22	48.5	16	22	36	32	26X1,5	160
OM126AGG-28LM		L		28	53	18	28	41	41	33X2	100
OM126AGG-35LM		L		35	62.5	20	35	50	50	42X2	100
OM126AGG-42LM		L		42	68.5	22	42	60	55	48X2	100
OM126AGG-6SM			S	6	39	12	6	17	17	12X1,5	630
OM126AGG-8SM			S	8	41.5	12	8	19	19	14X1,5	630
OM126AGG-10SM			S	10	44	12	10	22	22	16X1,5	630
OM126AGG-12SM			S	12	46	12	12	24	24	18X1,5	630
OM126AGG-14SM			S	14	50.5	14	14	27	27	20X1,5	630
OM126AGG-16SM			S	16	51	14	16	30	27	22X1,5	400
OM126AGG-20SM			S	20	59	16	20	36	32	27X2	400
OM126AGG-25SM			S	25	66	18	25	46	41	33X2	400
OM126AGG-30SM			S	30	71	20	30	50	50	42X2	250
OM126AGG-38SM			S	38	82	22	38	60	55	48X2	250

© Copyright by O.M. Oleodinamica srl - Jesi

OM126AGG

RACCORDO DIRITTO PER COMBINAZIONI CON GUARNIZIONE IN GOMMA - Filetto Gas Cilindrico

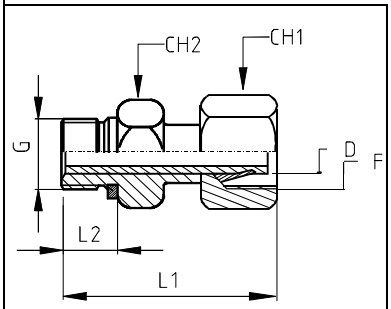

SERRATO

CODICE	SERIE			Ø tubo	Dimensioni (mm)						Pressione Esercizio
	LL	L	S	D	L1	L2	CH1	CH2	F	G	bar
OM126AGG-6LR		L		6	32.5	8	14	14	12X1,5	1/8"	250
OM126AGG-8LR		L		8	41	12	17	19	14X1,5	1/4"	250
OM126AGG-10LR		L		10	39.5	12	19	19	16X1,5	1/4"	250
OM126AGG-12LR		L		12	46	12	22	22	18X1,5	3/8"	250
OM126AGG-15LR		L		15	46	14	27	27	22X1,5	1/2"	250
OM126AGG-18LR		L		18	46.5	14	32	27	26X1,5	1/2"	160
OM126AGG-22LR		L		22	48	16	36	32	30X2	3/4"	160
OM126AGG-28LR		L		28	52.5	18	41	41	36X2	1"	100
OM126AGG-35LR		L		35	60.5	20	50	50	45X2	1 1/4"	100
OM126AGG-42LR		L		42	66	22	60	55	52X2	1 1/2"	100
OM126AGG-6SR			S	6	39	12	17	19	14X1,5	1/4"	630
OM126AGG-8SR			S	8	41	12	19	19	16X1,5	1/4"	630
OM126AGG-10SR			S	10	43.5	12	22	22	18X1,5	3/8"	630
OM126AGG-12SR			S	12	46	12	24	22	20X1,5	3/8"	630
OM126AGG-14SR			S	14	50.5	14	27	27	22X1,5	1/2"	630
OM126AGG-16SR			S	16	50.5	14	30	27	24X1,5	1/2"	400
OM126AGG-20SR			S	20	59	16	36	32	30X2	3/4"	400
OM126AGG-25SR			S	25	66	18	46	41	36X2	1"	400
OM126AGG-30SR			S	30	71	20	50	50	42X2	1 1/4"	250
OM126AGG-38SR			S	38	80	22	60	55	52X2	1 1/2"	250
MISURE SPECIALI											
OM126AGG-8LR3/8		L		8	41.5	12	17	22	14X1,5	3/8"	250
OM126AGG-12LR1/4		L		12	46	12	22	19	18X1,5	1/4"	250
OM126AGG-12LR1/2		L		12	48.5	14	22	27	18X1,5	1/2"	250
OM126AGG-15LR3/8		L		15	43.5	12	27	22	22X1,5	3/8"	250
OM126AGG-22LR1/2		L		22	47	14	36	32	30X2	1/2"	160
OM126AGG-12SR1/4			S	12	46	12	24	22	20X1,5	1/4"	630
OM126AGG-12SR1/2			S	12	48.5	14	24	27	20X1,5	1/2"	630
OM126AGG-14SR3/8			S	14	48	12	27	22	22X1,5	3/8"	630
OM126AGG-16SR3/8			S	16	48.5	12	30	22	24X1,5	3/8"	400
OM126AGG-16SR3/4			S	16	54.5	16	30	32	24X1,5	3/4"	400
OM126AGG-25SR3/4			S	25	64	16	46	32	36X2	3/4"	400
OM126AGG-38SR11/4			S	38	78	20	60	50	52X2	1 1/4"	250

© Copyright by O.M. Oleodinamica srl - Jesi

OM127

RACCORDO DI ESTREMITA' A "T" - Filetto Gas Conico

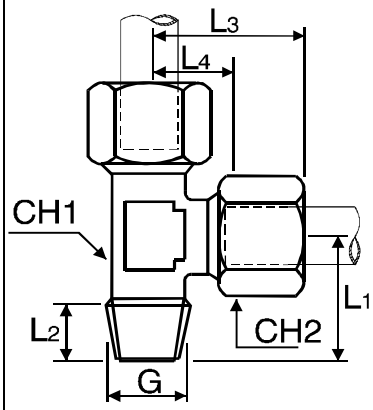

CODICE	SERIE			Ø tubo	Dimensioni (mm)							Pressione Esercizio
	LL	L	S		L1	L2	L3	L4	CH1	CH2	G	bar
OM127-4LLR	LL			4	17	8	21	11	9	10	1/8"	100
OM127-6LLR	LL			6	17	8	21	9.5	9	12	1/8"	100
OM127-8LLR	LL			8	20	8	23	11.5	12	14	1/8"	100
OM127-10LLR	LL			10	25.5	12	27	15	14	17	1/4"	100
OM127-12LLR	LL			12	23	12	27	13	17	19	1/4"	100
OM127-6LR		L		6	20	8	27	12	12	14	1/8"	315
OM127-8LR		L		8	26	12	29	14	12	17	1/4"	315
OM127-10LR		L		10	27	12	30	15	14	19	1/4"	315
OM127-12LR		L		12	30	12	32	17	17	22	3/8"	315
OM127-15LR		L		15	34	14	36	21	19	27	1/2"	315
OM127-18LR		L		18	36	14	40	23.5	24	32	1/2"	315
OM127-22LR		L		22	42	16	44	27.5	27	36	3/4"	160
OM127-28LR		L		28	48	18	47	30.5	36	41	1"	160
OM127-35LR		L		35	54	20	56	34.5	41	50	1 1/4"	160
OM127-42LR		L		42	61	22	63	40	50	60	1 1/2"	160
OM127-6SR			S	6	26	12	31	16	12	17	1/4"	630
OM127-8SR			S	8	27	12	32	17	14	19	1/4"	630
OM127-10SR			S	10	28	12	34	17.5	17	22	3/8"	630
OM127-12SR			S	12	31	12	38	21.5	17	24	3/8"	630
OM127-14SR			S	14	32	14	40	22	19	27	1/2"	630
OM127-16SR			S	16	32	14	43	24.5	24	30	1/2"	400
OM127-20SR			S	20	42	16	48	26.5	27	36	3/4"	400
OM127-25SR			S	25	48	18	54	30	36	46	1"	400
OM127-30SR			S	30	54	20	62	35.5	41	50	1 1/4"	400
OM127-38SR			S	38	61	22	72	41	50	60	1 1/2"	315

© Copyright by O.M. Oleodinamica srl - Jesi

OM127

RACCORDO DI ESTREMITA' A "T" - Filetto Metrico Conico

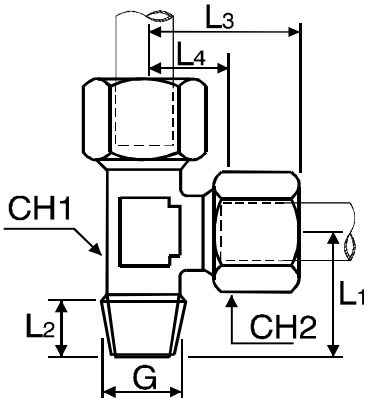

CODICE	SERIE			Ø tubo	Dimensioni (mm)								
	LL	L	S		L1	L2	L3	L4	CH1	CH2	G	bar	
OM127-4LLM	LL			4	17	8	21	11	9	10	8X1	100	
OM127-6LLM	LL			6	17	8	21	9.5	9	12	10X1	100	
OM127-8LLM	LL			8	20	8	23	11.5	12	14	10X1	100	
OM127-6LM		L		6	20	8	27	12	12	14	10X1	315	
OM127-8LM		L		8	26	12	29	14	12	17	12X1,5	315	
OM127-10LM		L		10	27	12	30	15	14	19	14X1,5	315	
OM127-12LM		L		12	30	12	32	17	17	22	16X1,5	315	
OM127-15LM		L		15	34	14	36	21	19	27	18X1,5	315	
OM127-18LM		L		18	36	14	40	23.5	24	32	22X1,5	315	
OM127-6SM			S	6	26	12	31	16	12	17	12X1,5	630	
OM127-8SM			S	8	27	12	32	17	14	19	14X1,5	630	
OM127-10SM			S	10	28	12	34	17.5	17	22	16X1,5	630	
OM127-12SM			S	12	31	12	38	21.5	17	24	18X1,5	630	
OM127-14SM			S	14	32	14	40	22	19	27	20X1,5	630	
OM127-16SM			S	16	32	14	43	24.5	24	30	22X1,5	400	

© Copyright by O.M. Oleodinamica srl - Jesi

OM127

RACCORDO DI ESTREMITA' A "T" - Filetto NPTF

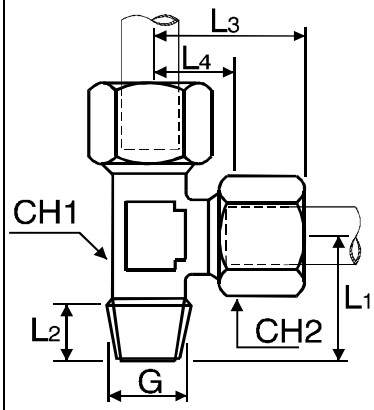

CODICE	SERIE			Ø tubo	Dimensioni (mm)							Pressione Esercizio
	LL	L	S		L1	L2	L3	L4	CH1	CH2	G	bar
OM127-4LLNPT	LL			4	17	8	21	11	9	10	1/8"	100
OM127-6LLNPT	LL			6	17	8	21	9.5	9	12	1/8"	100
OM127-8LLNPT	LL			8	20	8	23	11.5	12	14	1/8"	100
OM127-6LNPT		L		6	20	8	27	12	12	14	1/8"	315
OM127-8LNPT		L		8	26	12	29	14	12	17	1/4"	315
OM127-10LNPT		L		10	27	12	30	15	14	19	1/4"	315
OM127-12LNPT		L		12	30	12	32	17	17	22	3/8"	315
OM127-15LNPT		L		15	34	14	36	21	19	27	1/2"	315
OM127-18LNPT		L		18	36	14	40	23.5	24	32	1/2"	315
OM127-22LNPT		L		22	42	16	44	27.5	27	36	3/4"	160
OM127-28LNPT		L		28	48	18	47	30.5	36	41	1"	160
OM127-35LNPT		L		35	54	20	56	34.5	41	50	1 3/8"	160
OM127-42LNPT		L		42	61	22	63	40	50	60	1 1/2"	160
OM127-6SNPT			S	6	26	12	31	16	12	17	1/4"	630
OM127-8SNPT			S	8	27	12	32	17	14	19	1/4"	630
OM127-10SNPT			S	10	28	12	34	17.5	17	22	3/8"	630
OM127-12SNPT			S	12	31	12	38	21.5	17	24	3/8"	630
OM127-14SNPT			S	14	32	14	40	22	19	27	1/2"	630
OM127-16SNPT			S	16	32	14	43	24.5	24	30	1/2"	400
OM127-20SNPT			S	20	42	16	48	26.5	27	36	3/4"	400
OM127-25SNPT			S	25	48	18	54	30	36	46	1"	400
OM127-30SNPT			S	30	54	20	62	35.5	41	50	1 1/4"	400
OM127-38SNPT			S	38	61	22	72	41	50	60	1 1/2"	315

© Copyright by O.M. Oleodinamica srl - Jesi

OM129

RACCORDO DI ESTREMITA' A "T" - Filetto Gas Cilindrico

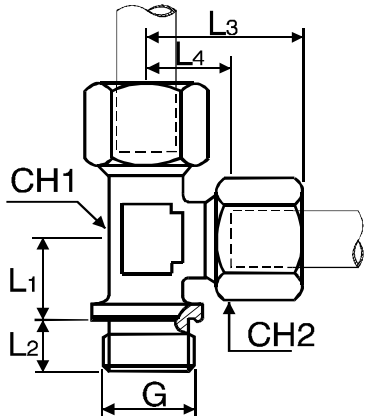

CODICE	SERIE			Ø tubo	Dimensioni (mm)							Pressione Esercizio
	LL	L	S		L1	L2	L3	L4	CH1	CH2	G	bar
OM129-22LR		L		22	26	16	44	27.5	27	36	3/4"	315
OM129-28LR		L		28	30	18	47	30.5	36	41	1"	315
OM129-35LR		L		35	34	20	56	34.5	41	50	1 1/4"	315
OM129-42LR		L		42	39	22	63	40	50	60	1 1/2"	315
OM129-20SR			S	20	26	16	48	26.5	27	36	3/4"	400
OM129-25SR			S	25	30	18	54	31	36	46	1"	400
OM129-30SR			S	30	34	20	62	35.5	41	50	1 1/4"	250
OM129-38SR			S	38	39	22	72	41	50	60	1 1/2"	250

© Copyright by O.M. Oleodinamica srl - Jesi

OM129

RACCORDO DI ESTREMITA' A "T" - Filetto Metrico Cilindrico

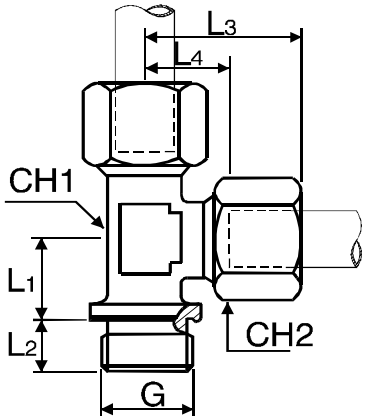

CODICE	SERIE			Ø tubo	Dimensioni (mm)							Pressione Esercizio
	LL	L	S		L1	L2	L3	L4	CH1	CH2	G	bar
OM129-22LM		L		22	26	16	44	27.5	27	36	26X1,5	315
OM129-28LM		L		28	30	18	47	30.5	36	41	33X2	315
OM129-35LM		L		35	34	20	56	34.5	41	50	42X2	315
OM129-42LM		L		42	39	22	63	40	50	60	48X2	315
OM129-20SM			S	20	26	16	48	26.5	27	36	27X2	400
OM129-25SM			S	25	30	18	54	31	36	46	33X2	400
OM129-30SM			S	30	34	20	62	35.5	41	50	42X2	250
OM129-38SM			S	38	39	22	72	41	50	60	48X2	250

© Copyright by O.M. Oleodinamica srl - Jesi

OM130

RACCORDO AD OCCHIO SENZA STROZZATURA - Filetto Gas Cilindrico

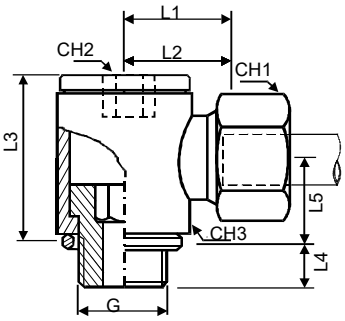

CODICE	SERIE			Ø tubo	Dimensioni (mm)									Pressione Esercizio
	LL	L	S		L1	L2	L3	L4	L5	CH1	CH2	CH3	G	bar
OM130-6LR		L		6	27	12.5	24	8	12	14	6	19	1/8"	250
OM130-8LR		L		8	29	14.5	30	12	16	17	8	22	1/4"	250
OM130-10LR		L		10	30	15.5	30	12	16	19	8	22	1/4"	250
OM130-12LR		L		12	33	18	37	12	18	22	10	27	3/8"	250
OM130-15LR		L		15	37	22	42	14	21	27	12	32	1/2"	250
OM130-18LR		L		18	38	21.5	46	14	23	32	12	36	1/2"	250
OM130-22LR		L		22	45	28.5	58	16	28	36	17	46	3/4"	100
OM130-28LR		L		28	48	31.5	64	18	32	41	22	50	1"	100
OM130-35LR		L		35	57	35.5	76	20	37	50	27	60	1 1/4"	100
OM130-42LR		L		42	63	40	85	22	42	60	32	70	1 1/2"	100
OM130-6SR			S	6	31	16.5	30	12	16	17	8	22	1/4"	400
OM130-8SR			S	8	31	16.5	30	12	16	19	8	22	1/4"	400
OM130-10SR			S	10	35	18.5	37	12	18	22	10	27	3/8"	400
OM130-12SR			S	12	35	18.5	37	12	18	24	10	27	3/8"	400
OM130-14SR			S	14	41	23	42	14	21	27	12	32	1/2"	400
OM130-16SR			S	16	41	22.5	46	14	23	30	12	36	1/2"	400
OM130-20SR			S	20	49	27.5	58	16	28	36	17	46	3/4"	400
OM130-25SR			S	25	55	31	64	18	32	46	22	50	1"	250
OM130-30SR			S	30	63	36.5	76	20	37	50	27	60	1 1/4"	250

© Copyright by O.M. Oleodinamica srl - Jesi

OM130

RACCORDO AD OCCHIO SENZA STROZZATURA - Filetto Metrico Cilindrico

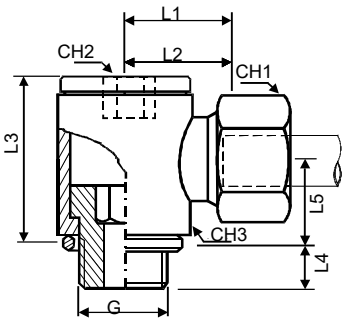

CODICE	SERIE			Ø tubo	Dimensioni (mm)									Pressione Esercizio
	LL	L	S		L1	L2	L3	L4	L5	CH1	CH2	CH3	G	bar
OM130-6LM		L		6	27	12.5	24	8	12	14	6	19	10X1	250
OM130-8LM		L		8	29	14.5	30	12	16	17	8	22	12X1,5	250
OM130-10LM		L		10	30	15.5	30	12	16	19	8	22	14X1,5	250
OM130-12LM		L		12	33	18	37	12	18	22	10	27	16X1,5	250
OM130-15LM		L		15	37	22	42	14	21	27	12	32	18X1,5	250
OM130-18LM		L		18	38	21.5	46	14	23	32	12	36	22X1,5	250
OM130-22LM		L		22	45	28.5	58	16	28	36	17	46	26X1,5	100
OM130-28LM		L		28	48	31.5	64	18	32	41	22	50	33X2	100
OM130-35LM		L		35	57	35.5	76	20	37	50	27	60	42X2	100
OM130-42LM		L		42	63	40	85	22	42	60	32	70	48X2	100
OM130-6SM			S	6	31	16.5	30	12	16	17	8	22	12X1,5	400
OM130-8SM			S	8	31	16.5	30	12	16	19	8	22	14X1,5	400
OM130-10SM			S	10	35	18.5	37	12	18	22	10	27	16X1,5	400
OM130-12SM			S	12	35	18.5	37	12	18	24	10	27	18X1,5	400
OM130-14SM			S	14	41	23	42	14	21	27	12	32	20X1,5	400
OM130-16SM			S	16	41	22.5	46	14	23	30	12	36	22X1,5	400
OM130-20SM			S	20	49	27.5	58	16	28	36	17	46	27X2	400
OM130-25SM			S	25	55	31	64	18	32	46	22	50	33X2	250
OM130-30SM			S	30	63	36.5	76	20	37	50	27	60	42X2	250

© Copyright by O.M. Oleodinamica srl - Jesi

OM131

RACCORDO AD OCCHIO - Filetto Gas Cilindrico

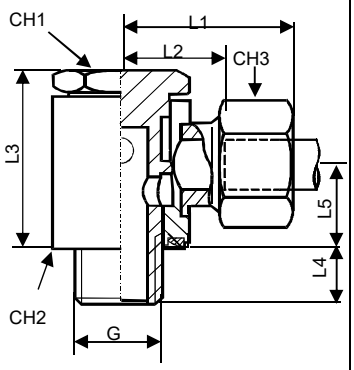

CODICE	SERIE			Ø tubo	Dimensioni (mm)									Pressione Esercizio
	LL	L	S		L1	L2	L3	L4	L5	CH1	CH2	CH3	G	bar
OM131-4LLR	LL			4	20	13	21.5	6	10	14	14	10	1/8"	100
OM131-6LLR	LL			6	20	11.5	21.5	6	10	14	14	12	1/8"	100
OM131-8LLR	LL			8	21	12.5	21.5	6	10	14	14	14	1/8"	100
OM131-6LR		L		6	26	11	21.5	6	10	14	14	14	1/8"	250
OM131-8LR		L		8	28	14	27.5	9	13	19	19	17	1/4"	250
OM131-10LR		L		10	29	13.5	27.5	9	13	19	19	19	1/4"	250
OM131-12LR		L		12	30	16	34	9	16	22	22	22	3/8"	250
OM131-15LR		L		15	34	19.5	45	11	22	27	30	27	1/2"	250
OM131-18LR		L		18	36	19.5	44	11	21	27	30	32	1/2"	160
OM131-22LR		L		22	42	25.5	48	13	23	32	36	36	3/4"	160
OM131-6SR			S	6	30	14.5	27.5	9	13	19	19	17	1/4"	250
OM131-8SR			S	8	30	14.5	27.5	9	13	19	19	19	1/4"	250
OM131-10SR			S	10	33	15.5	34	9	16	22	22	22	3/8"	250
OM131-12SR			S	12	33	15.5	34	9	16	22	22	24	3/8"	250
OM131-14SR			S	14	38	19.5	45	11	22	27	30	27	1/2"	250
OM131-16SR			S	16	39	19	44	11	21	27	30	30	1/2"	160
OM131-20SR			S	20	45	22.5	48	13	23	32	36	36	3/4"	160

© Copyright by O.M. Oleodinamica srl - Jesi

OM131

RACCORDO AD OCCHIO - Filetto Metrico Cilindrico

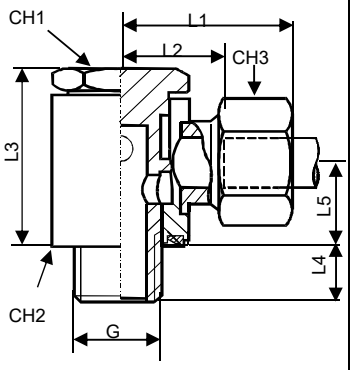

CODICE	SERIE			Ø tubo	Dimensioni (mm)									Pressione Esercizio
	LL	L	S		L1	L2	L3	L4	L5	CH1	CH2	CH3	G	bar
OM131-4LLM	LL			4	21	13	21.5	6	10	14	12	10	8X1	100
OM131-6LLM	LL			6	22	11.5	21.5	6	10	14	14	12	10X1	100
OM131-8LLM	LL			8	23	12.5	21.5	6	10	14	14	14	10X1	100
OM131-6LM		L		6	25	11	21.5	6	10	14	14	14	10X1	250
OM131-8LM		L		8	27	14	27.5	9	13	19	19	17	12X1,5	250
OM131-10LM		L		10	27	13.5	27.5	9	13	19	22	19	14X1,5	250
OM131-12LM		L		12	30	16	34	9	16	22	24	22	16X1,5	250
OM131-15LM		L		15	32	17	37	9	17	24	30	27	18X1,5	250
OM131-18LM		L		18	35	19.5	44	11	21	30	30	32	22X1,5	160
OM131-22LM		L		22	40	25.5	48	13	23	36	36	36	26X1,5	160
OM131-6SM			S	6	28	14.5	27.5	9	13	19	17	17	12X1,5	250
OM131-8SM			S	8	29	14.5	27.5	9	13	19	19	19	14X1,5	250
OM131-10SM			S	10	33	15.5	34	9	16	22	22	22	16X1,5	250
OM131-12SM			S	12	34	15.5	34	9	16	22	24	24	18X1,5	250
OM131-14SM			S	14	36	19.5	45	10	22	27	27	27	20X1,5	250
OM131-16SM			S	16	40	19	44	11	21	27	30	30	22X1,5	160
OM131-20SM			S	20	46	22.5	48	13	23	32	36	36	27X2	160

© Copyright by O.M. Oleodinamica srl - Jesi

OM132

RACCORDO DI RIDUZIONE SEMPLICE

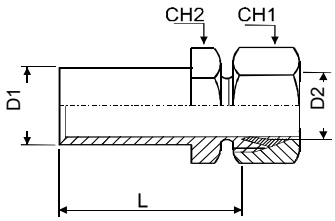

NON SERRATO

CODICE	SERIE				Dimensioni (mm)									Pressione Esercizio
	LL	L	S		L		D1	D2		CH1	CH2			bar
OM132-8/6L		L			29.5		8	6		14	14			315
OM132-10/6L		L			29.5		10	6		14	14			315
OM132-10/8L		L			29.5		10	8		17	17			315
OM132-12/6L		L			29.5		12	6		14	14			315
OM132-12/8L		L			29.5		12	8		17	17			315
OM132-12/10L		L			31		12	10		19	17			315
OM132-15/6L		L			29.5		15	6		14	17			315
OM132-15/8L		L			29.5		15	8		17	17			315
OM132-15/10L		L			31		15	10		19	17			315
OM132-15/12L		L			31		15	12		22	19			315
OM132-18/6L		L			30.5		18	6		14	19			315
OM132-18/8L		L			30.5		18	8		17	19			315
OM132-18/10L		L			32		18	10		19	19			315
OM132-18/12L		L			32		18	12		22	19			315
OM132-18/15L		L			32.5		18	15		27	24			315
OM132-22/6L		L			33.5		22	6		14	24			160
OM132-22/8L		L			33.5		22	8		17	24			160
OM132-22/10L		L			35		22	10		19	24			160
OM132-22/12L		L			35		22	12		22	24			160
OM132-22/15L		L			35.5		22	15		27	24			160
OM132-22/18L		L			35		22	18		32	27			160
OM132-28/6L		L			34.5		28	6		14	32			160
OM132-28/8L		L			34.5		28	8		17	32			160
OM132-28/10L		L			36		28	10		19	32			160
OM132-28/12L		L			36		28	12		22	32			160
OM132-28/15L		L			36.5		28	15		27	32			160
OM132-28/18L		L			36		28	18		32	32			160
OM132-28/22L		L			36		28	22		36	36			160
OM132-35/6L		L			40.5		35	6		14	36			160
OM132-35/8L		L			40.5		35	8		17	36			160
OM132-35/10L		L			42		35	10		19	36			160
OM132-35/12L		L			42		35	12		22	36			160
OM132-35/15L		L			42.5		35	15		27	36			160
OM132-35/18L		L			42		35	18		32	36			160
OM132-35/22L		L			44		35	22		36	36			160
OM132-35/28L		L			44		35	28		41	41			160
OM132-42/6L		L			42.5		42	6		14	46			160
OM132-42/8L		L			42.5		42	8		17	46			160
OM132-42/10L		L			44		42	10		19	46			160
OM132-42/12L		L			43		42	12		22	46			160
OM132-42/15L		L			44.5		42	15		27	46			160
OM132-42/18L		L			44		42	18		32	46			160
OM132-42/22L		L			46		42	22		36	46			160
OM132-42/28L		L			46		42	28		41	46			160
OM132-42/35L		L			45		42	35		50	46			160

© Copyright by O.M. Oleodinamica srl - Jesi

OM132

RACCORDO DI RIDUZIONE SEMPLICE

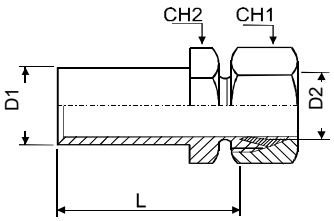

NON SERRATO

CODICE	SERIE				Dimensioni (mm)									Pressione Esercizio
	LL	L	S		L		D1	D2		CH1	CH2			bar
OM132-8/6S			S		31		8	6		17	17			630
OM132-10/6S			S		32		10	6		17	17			630
OM132-10/8S			S		32		10	8		19	17			630
OM132-12/6S			S		33		12	6		17	17			630
OM132-12/8S			S		33		12	8		19	17			630
OM132-12/10S			S		32.5		12	10		22	19			630
OM132-14/6S			S		37		14	6		17	17			630
OM132-14/8S			S		37		14	8		19	17			630
OM132-14/10S			S		36.5		14	10		22	19			630
OM132-14/12S			S		36.5		14	12		24	22			630
OM132-16/6S			S		37		16	6		17	17			400
OM132-16/8S			S		37		16	8		19	17			400
OM132-16/10S			S		36.5		16	10		22	19			400
OM132-16/12S			S		36.5		16	12		24	22			400
OM132-16/14S			S		38		16	14		27	24			400
OM132-20/6S			S		43		20	6		17	22			400
OM132-20/8S			S		43		20	8		19	22			400
OM132-20/10S			S		42.5		20	10		22	22			400
OM132-20/12S			S		42.5		20	12		24	22			400
OM132-20/14S			S		44		20	14		27	24			400
OM132-20/16S			S		43.5		20	16		30	27			400
OM132-25/6S			S		47		25	6		17	27			400
OM132-25/8S			S		47		25	8		19	27			400
OM132-25/10S			S		46.5		25	10		22	27			400
OM132-25/12S			S		46.5		25	12		24	27			400
OM132-25/14S			S		48		25	14		27	27			400
OM132-25/16S			S		47.5		25	16		30	27			400
OM132-25/25S			S		47.5		25	25		36	32			400
OM132-30/6S			S		49		30	6		17	32			400
OM132-30/8S			S		49		30	8		19	32			400
OM132-30/10S			S		48.5		30	10		22	32			400
OM132-30/12S			S		48.5		30	12		24	32			400
OM132-30/14S			S		50		30	14		27	32			400
OM132-30/16S			S		49.5		30	16		30	32			400
OM132-30/20S			S		49.5		30	20		36	32			400
OM132-30/25S			S		50		30	25		46	41			400
OM132-38/6S			S		56		38	6		17	41			315
OM132-38/8S			S		56		38	8		19	41			315
OM132-38/10S			S		55.5		38	10		22	41			315
OM132-38/12S			S		56.5		38	12		24	41			315
OM132-38/14S			S		57		38	14		27	41			315
OM132-38/16S			S		56.5		38	16		30	41			315
OM132-38/20S			S		56.5		38	20		36	41			315
OM132-38/25S			S		57		38	25		46	41			315
OM132-38/30S			S		57.5		38	30		50	46			315

© Copyright by O.M. Oleodinamica srl - Jesi

OM136

RACCORDO AD OCCHIO DOPPIO - Filetto Gas Cilindrico

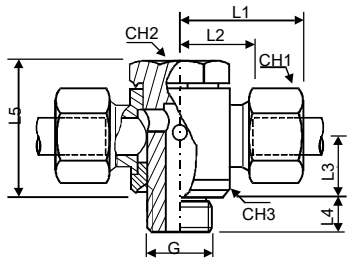

CODICE	SERIE			Ø tubo	Dimensioni (mm)									Pressione Esercizio
	LL	L	S		L1	L2	L3	L4	L5	CH1	CH2	CH3	G	bar
OM136-4LLR	LL			4	22	13	10	6	22	10	14	18	1/8"	100
OM136-6LLR	LL			6	24	11.5	10	6	22	12	14	18	1/8"	100
OM136-8LLR	LL			8	25	11.5	10	6	22	14	14	18	1/8"	100
OM136-6LR		L		6	26	12	10	6	22	14	14	18	1/8"	315
OM136-8LR		L		8	29	14	15.5	12	30.5	17	19	22	1/4"	315
OM136-10LR		L		10	29	15	15.5	12	30.5	19	19	22	1/4"	315
OM136-12LR		L		12	32	17.5	18	12	38.5	22	24	27	3/8"	315
OM136-15LR		L		15	37	20	20	14	44.5	27	27	30	1/2"	315
OM136-18LR		L		18	38	19.5	20	14	44.5	32	27	30	1/2"	315
OM136-22LR		L		22	45	24.5	24	16	53	36	32	41	3/4"	160
OM136-28LR		L		28	47	29.5	29	18	64	41	41	50	1"	160
OM136-35LR		L		35	55	35.5	36	20	79	50	50	60	1 1/4"	160
OM136-42LR		L		42	64	40	41.5	22	90	60	55	70	1 1/2"	160
OM136-6SR			S	6	30	16	15.5	12	30.5	17	19	22	1/4"	400
OM136-8SR			S	8	30	16	15.5	12	30.5	19	19	22	1/4"	400
OM136-10SR			S	10	35	18	18	12	38.5	22	24	27	3/8"	400
OM136-12SR			S	12	35	19.5	18	12	38.5	24	24	27	3/8"	400
OM136-14SR			S	14	40	22	21	14	45.5	27	27	32	1/2"	400
OM136-16SR			S	16	40	23.5	21	14	45.5	30	27	32	1/2"	400
OM136-20SR			S	20	50	28.5	28	16	61	36	32	45	3/4"	400
OM136-25SR			S	25	56	31	31	18	68	46	41	50	1"	250
OM136-30SR			S	30	64	36.5	36.5	20	79	50	50	60	1 1/4"	250
OM136-38SR			S	38	73	41	41.5	22	90	60	55	70	1 1/2"	250

© Copyright by O.M. Oleodinamica srl - Jesi

OM136

RACCORDO AD OCCHIO DOPPIO - Filetto Metrico Cilindrico

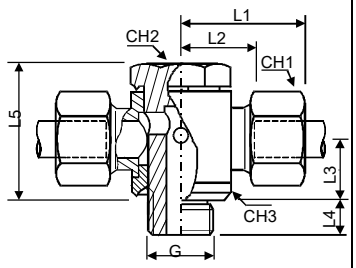

CODICE	SERIE			Ø tubo	Dimensioni (mm)									Pressione Esercizio
	LL	L	S		L1	L2	L3	L4	L5	CH1	CH2	CH3	G	bar
OM136-4LLM	LL			4	22	13	10	6	22	10	14	18	8X1	100
OM136-6LLM	LL			6	24	11.5	10	6	22	12	14	18	10X1	100
OM136-8LLM	LL			8	25	11.5	10	6	22	14	14	18	10X1	100
OM136-6LM		L		6	26	12	10	6	22	14	14	18	10X1	315
OM136-8LM		L		8	29	14	15.5	12	30.5	17	19	22	12X1,5	315
OM136-10LM		L		10	29	15	15.5	12	30.5	19	19	22	14X1,5	315
OM136-12LM		L		12	32	17.5	18	12	38.5	22	24	27	16X1,5	315
OM136-15LM		L		15	37	20	20	14	44.5	27	27	30	18X1,5	315
OM136-18LM		L		18	38	19.5	20	14	44.5	32	27	30	22X1,5	315
OM136-22LM		L		22	45	24.5	24	16	53	36	32	41	26X1,5	160
OM136-28LM		L		28	47	29.5	29	18	64	41	41	50	33X2	160
OM136-35LM		L		35	55	35.5	36	20	79	50	50	60	42X2	160
OM136-42LM		L		42	64	40	41.5	22	90	60	55	70	48X2	160
OM136-6SM			S	6	30	16	15.5	12	30.5	17	19	22	12X1,5	400
OM136-8SM			S	8	30	16	15.5	12	30.5	19	19	22	14X1,5	400
OM136-10SM			S	10	35	18	18	12	38.5	22	24	27	16X1,5	400
OM136-12SM			S	12	35	19.5	18	12	38.5	24	24	27	18X1,5	400
OM136-14SM			S	14	40	22	21	14	45.5	27	27	32	20X1,5	400
OM136-16SM			S	16	40	23.5	21	14	45.5	30	27	32	22X1,5	400
OM136-20SM			S	20	50	28.5	28	16	61	36	32	45	27X2	400
OM136-25SM			S	25	56	31	31	18	68	46	41	50	33X2	250
OM136-30SM			S	30	64	36.5	36.5	20	79	50	50	60	42X2	250
OM136-38SM			S	38	73	41	41.5	22	90	60	55	70	48X2	250

© Copyright by O.M. Oleodinamica srl - Jesi

OM136GG

RACORDO DOPPIO CON GUARNIZIONE PIANA - Filetto Gas Cilindrico

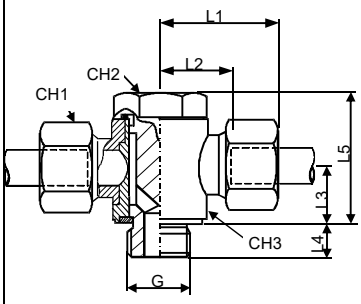

CODICE	SERIE			Ø tubo	Dimensioni (mm)									Pressione Esercizio
	LL	L	S		L1	L2	L3	L4	L5	CH1	CH2	CH3	G	bar
OM136GG-4LLR	LL			4	25	15	10.5	8	24	10	17	17	1/8"	100
OM136GG-6LLR	LL			6	25	13.5	10.5	8	24	12	17	17	1/8"	100
OM136GG-8LLR	LL			8	25	13.5	10.5	8	24	14	17	17	1/8"	100
OM136GG-6LR		L		6	27	12	10.5	8	24	14	17	17	1/8"	315
OM136GG-8LR		L		8	29	14.5	14	12	32	17	19	22	1/4"	315
OM136GG-10LR		L		10	30	15.5	14	12	32	19	19	22	1/4"	315
OM136GG-12LR		L		12	33	18	16.5	12	38	22	24	27	3/8"	315
OM136GG-15LR		L		15	37	21.5	21.5	14	46	27	30	32	1/2"	315
OM136GG-18LR		L		18	37	21.5	21.5	14	46	32	30	32	1/2"	315
OM136GG-22LR		L		22	44	27.5	24	16	54	36	36	41	3/4"	160
OM136GG-28LR		L		28	49	32	30.5	18	66	41	46	50	1"	160
OM136GG-35LR		L		35	58	36	35.5	20	80	50	55	60	1 1/4"	160
OM136GG-42LR		L		42	63	40.5	40.5	22	90	60	60	70	1 1/2"	160
OM136GG-6SR			S	6	31	16.5	14	12	32	17	19	22	1/4"	400
OM136GG-8SR			S	8	31	16.5	12	12	14	19	19	22	1/4"	400
OM136GG-10SR			S	10	35	18.5	16.5	12	38	22	24	27	3/8"	400
OM136GG-12SR			S	12	35	18.5	16.5	12	28	24	24	27	3/8"	400
OM136GG-14SR			S	14	40	22.5	21.5	14	46	27	30	32	1/2"	400
OM136GG-16SR			S	16	40	22	21.5	14	46	30	30	32	1/2"	400
OM136GG-20SR			S	20	48	26.5	24	16	54	36	36	41	3/4"	400
OM136GG-25SR			S	25	56	31.5	30.5	18	66	46	46	50	1"	250
OM136GG-30SR			S	30	64	37	35.5	20	80	50	55	60	1 1/4"	250
OM136GG-38SR			S	38	72	41.5	40.5	22	90	60	60	70	1 1/2"	250

© Copyright by O.M. Oleodinamica srl - Jesi

OM136GG

RACCORDO AD OCCHIO DOPPIO CON GUARNIZIONE PIANA - Filetto Metrico Cilindrico

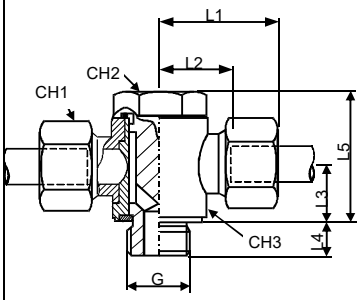

CODICE	SERIE			Ø tubo	Dimensioni (mm)									Pressione Esercizio
	LL	L	S		L1	L2	L3	L4	L5	CH1	CH2	CH3	G	bar
OM136GG-4LLM	LL			4	25	15	10.5	8	24	10	14	17	8X1	100
OM136GG-6LLM	LL			6	25	13.5	10.5	8	24	12	17	17	10X1	100
OM136GG-8LLM	LL			8	25	13.5	10.5	8	24	14	17	17	10X1	100
OM136GG-6LM		L		6	27	12	10.5	8	24	14	17	17	10X1	315
OM136GG-8LM		L		8	29	14.5	14	12	32	17	19	22	12X1,5	315
OM136GG-10LM		L		10	30	15.5	14	12	32	19	19	22	14X1,5	315
OM136GG-12LM		L		12	33	18	16.5	12	38	22	24	27	16X1,5	315
OM136GG-15LM		L		15	37	21.5	21.5	14	46	27	27	32	18X1,5	315
OM136GG-18LM		L		18	37	21.5	21.5	14	46	32	30	32	22X1,5	315
OM136GG-22LM		L		22	44	27.5	24	16	54	36	36	41	26X1,5	160
OM136GG-28LM		L		28	49	32	30.5	18	66	41	46	50	33X2	160
OM136GG-35LM		L		35	58	36	35.5	20	80	50	55	60	42X2	160
OM136GG-42LM		L		42	63	40.5	40.5	22	90	60	60	70	48X2	160
OM136GG-6SM			S	6	31	16.5	14	12	32	17	19	22	12X1,5	400
OM136GG-8SM			S	8	31	16.5	12	12	14	19	19	22	14X1,5	400
OM136GG-10SM			S	10	35	18.5	16.5	12	38	22	24	27	16X1,5	400
OM136GG-12SM			S	12	35	18.5	16.5	12	28	24	27	27	18X1,5	400
OM136GG-14SM			S	14	40	22.5	21.5	14	46	27	30	32	20X1,5	400
OM136GG-16SM			S	16	40	22	21.5	14	46	30	30	32	22X1,5	400
OM136GG-20SM			S	20	48	26.5	24	16	54	36	36	41	27X1,5	400
OM136GG-25SM			S	25	56	31.5	30.5	18	66	46	46	50	33X2	250
OM136GG-30SM			S	30	64	37	35.5	20	80	50	55	60	42X2	250
OM136GG-38SM			S	38	72	41.5	40.5	22	90	60	60	70	48X2	250

© Copyright by O.M. Oleodinamica srl - Jesi

OM141

RACCORDO DI RIDUZIONE FILETTATO MASCHIO FEMMINA - Filetto Gas Cilindrico

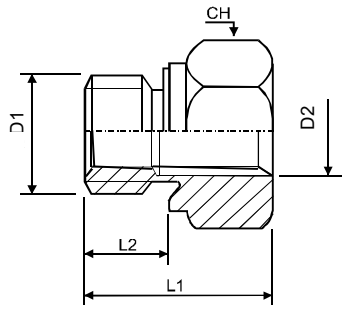

SERIE A

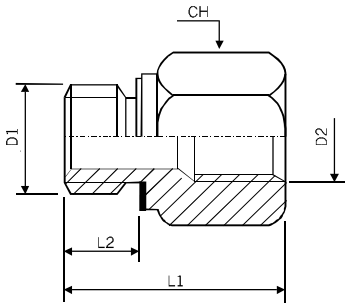

SERIE B

CODICE	SERIE				Dimensioni (mm)							Pressione Esercizio
		A	B		L1	L2		CH		D1	D2	bar
OM141-3/8"X1/8"R		A			22.5	12		22		3/8"	1/8"	630
OM141-1/2"X1/8"R		A			24	14		27		1/2"	1/8"	630
OM141-1/2"X1/4"R		A			24	14		27		1/2"	1/4"	400
OM141-3/8"X1/4"R		A			26	16		32		3/4"	1/4"	400
OM141-3/4"X3/8"R		A			26	16		32		3/4"	3/8"	400
OM141-1"X1/4"R		A			29	18		41		1"	1/4"	400
OM141-1"X3/8"R		A			29	18		41		1"	3/8"	400
OM141-1"X1/2"R		A			29	18		41		1"	1/2"	400
OM141-11/4"X1/2"R		A			32	20		50		1 1/4"	1/2"	250
OM141-11/4"X3/4"R		A			32	20		50		1 1/4"	3/4"	250
OM141-11/2"X1/2"R		A			36	22		55		1 1/2"	1/2"	250
OM141-11/2"X3/4"R		A			36	22		55		1 1/2"	3/4"	250
OM141-11/2"X1"R		A			36	22		55		1 1/2"	1"	250
OM141-1/8"X1/4"R			B		31	8		19		1/8"	1/4"	630
OM141-1/8"X3/8"R			B		32	8		24		1/8"	3/8"	630
OM141-1/4"X1/8"R			B		28	12		19		1/4"	1/8"	630
OM141-1/4"X3/8"R			B		36	12		24		1/4"	3/8"	630
OM141-1/4"X1/2"R			B		40	12		30		1/4"	1/2"	630
OM141-1/4"X3/4"R			B		43	12		36		1/4"	3/4"	400
OM141-3/8"X1/4"R			B		36	12		22		3/8"	1/4"	630
OM141-3/8"X1/2"R			B		41	12		30		3/8"	1/2"	630
OM141-3/8"X3/4"R			B		44	12		36		3/8"	3/4"	400
OM141-1/2"X3/8"R			B		36	14		27		1/2"	3/8"	400
OM141-1/2"X3/4"R			B		46	14		36		1/2"	3/4"	400
OM141-1/2"X1"R			B		49	14		41		1/2"	1"	400
OM141-1/2"X11/4"R			B		53	14		55		1/2"	1 1/4"	250
OM141-3/4"X1/2"R			B		41	16		32		3/4"	1/2"	400
OM141-3/4"X1"R			B		51	16		41		3/4"	1"	400
OM141-3/4"X11/4"R			B		55	16		55		3/4"	1 1/4"	250
OM141-3/4"X11/2"R			B		57	16		60		3/4"	1 1/2"	250
OM141-1"X3/4"R			B		47	18		41		1"	3/4"	400
OM141-1"X11/4"R			B		57	18		55		1"	1 1/4"	250
OM141-1"X11/2"R			B		59	18		60		1"	1 1/2"	250
OM141-11/4"X1"R			B		52	20		50		1 1/4"	1"	250
OM141-11/4"X11/2"R			B		60	20		60		1 1/4"	1 1/2"	250
OM141-111/2"X11/4"R			B		58	22		55		1 1/2"	1 1/4"	250

© Copyright by O.M. Oleodinamica srl - Jesi

OM143

RACCORDO DI RIDUZIONE MASCHIO/FEMMINA - Filetto Gas Conico

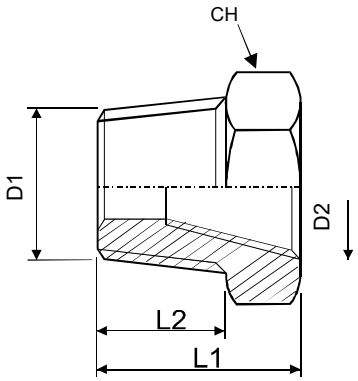

SERIE A

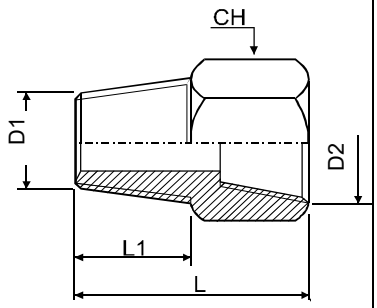

SEIRIE B

CODICE	SERIE				Dimensioni (mm)						
		A	B		L1	L2	CH		D1	D2	
OM143-3/8"X1/8"R		A			20	12	22		3/8"	1/8"	
OM143-1/2"X1/8"R		A			22	14	27		1/2"	1/8"	
OM143-1/2"X1/4"R		A			22	14	27		1/2"	1/4"	
OM143-3/8"X1/4"R		A			25	16	32		3/4"	1/4"	
OM143-3/4"X3/8"R		A			25	16	32		3/4"	3/8"	
OM143-1"X1/4"R		A			28	18	41		1"	1/4"	
OM143-1"X3/8"R		A			28	18	41		1"	3/8"	
OM143-1"X1/2"R		A			28	18	41		1"	1/2"	
OM143-11/4"X1/2"R		A			32	20	50		1 1/4"	1/2"	
OM143-11/4"X3/4"R		A			32	20	50		1 1/4"	3/4"	
OM143-11/2"X1/2"R		A			37	22	55		1 1/2"	1/2"	
OM143-11/2"X3/4"R		A			37	22	55		1 1/2"	3/4"	
OM143-11/2"X1"R		A			37	22	55		1 1/2"	1"	
OM143-1/8"X1/4"R			B		26	8	19		1/8"	1/4"	
OM143-1/8"X3/8"R			B		26	8	24		1/8"	3/8"	
OM143-1/4"X1/8"R			B		29	14	19		1/4"	1/8"	
OM143-1/4"X3/8"R			B		34	14	24		1/4"	3/8"	
OM143-1/4"X1/2"R			B		40	14	30		1/4"	1/2"	
OM143-1/4"X3/4"R			B		40	14	36		1/4"	3/4"	
OM143-3/8"X1/4"R			B		32	14	22		3/8"	1/4"	
OM143-3/8"X1/2"R			B		38	14	30		3/8"	1/2"	
OM143-3/8"X3/4"R			B		38	14	36		3/8"	3/4"	
OM143-1/2"X3/8"R			B		36	16	27		1/2"	3/8"	
OM143-1/2"X3/4"R			B		43	16	36		1/2"	3/4"	
OM143-1/2"X1"R			B		50	16	41		1/2"	1"	
OM143-1/2"X11/4"R			B		50	16	55		1/2"	1 1/4"	
OM143-3/4"X1/2"R			B		43	18	32		3/4"	1/2"	
OM143-3/4"X1"R			B		50	18	41		3/4"	1"	
OM143-3/4"X11/4"R			B		50	18	55		3/4"	1 1/4"	
OM143-3/4"X11/2"R			B		50	18	60		3/4"	1 1/2"	
OM143-1"X3/4"R			B		48	20	41		1"	3/4"	
OM143-1"X11/4"R			B		54	20	55		1"	1 1/4"	
OM143-1"X11/2"R			B		54	20	60		1"	1 1/2"	
OM143-11/4"X1"R			B		52	22	50		1 1/4"	1"	
OM143-11/4"X11/2"R			B		57	22	60		1 1/4"	1 1/2"	
OM143-111/2"X11/4"R			B		57	24	55		1 1/2"	1 1/4"	

© Copyright by O.M. Oleodinamica srl - Jesi

OM143

RACCORDO DI RIDUZIONE MASCHIO FEMMINA - Filetto NPTF

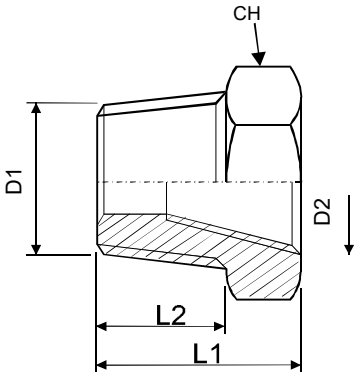

SERIE A

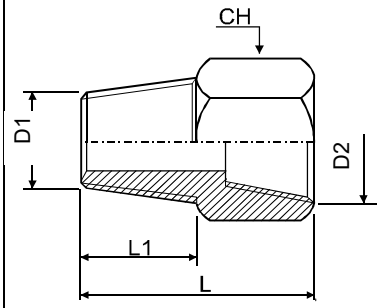

SERIE B

CODICE	SERIE				Dimensioni (mm)						
		A	B		L1	L2	CH		D1	D2	
OM143-3/8"X1/8"NPT		A			23	15	22		3/8"	1/8"	
OM143-1/2"X1/8"NPT		A			28	20	27		1/2"	1/8"	
OM143-1/2"X1/4"NPT		A			28	20	27		1/2"	1/4"	
OM143-3/8"X1/4"NPT		A			29	20	32		3/4"	1/4"	
OM143-3/4"X3/8"NPT		A			29	20	32		3/4"	3/8"	
OM143-1"X1/4"NPT		A			35	25	41		1"	1/4"	
OM143-1"X3/8"NPT		A			35	25	41		1"	3/8"	
OM143-1"X1/2"NPT		A			35	25	41		1"	1/2"	
OM143-11/4"X1/2"NPT		A			37	25	50		1 1/4"	1/2"	
OM143-11/4"X3/4"NPT		A			37	25	50		1 1/4"	3/4"	
OM143-11/2"X1/2"NPT		A			41	26	55		1 1/2"	1/2"	
OM143-11/2"X3/4"NPT		A			41	26	55		1 1/2"	3/4"	
OM143-11/2"X1"NPT		A			41	26	55		1 1/2"	1"	
OM143-1/8"X1/4"NPT			B		29	8	19		1/8"	1/4"	
OM143-1/8"X3/8"NPT			B		31	8	24		1/8"	3/8"	
OM143-1/4"X1/8"NPT			B		29	14	19		1/4"	1/8"	
OM143-1/4"X3/8"NPT			B		39	14	24		1/4"	3/8"	
OM143-1/4"X1/2"NPT			B		46	14	30		1/4"	1/2"	
OM143-1/4"X3/4"NPT			B		46	14	36		1/4"	3/4"	
OM143-3/8"X1/4"NPT			B		36	15	22		3/8"	1/4"	
OM143-3/8"X1/2"NPT			B		47	15	30		3/8"	1/2"	
OM143-3/8"X3/4"NPT			B		47	15	36		3/8"	3/4"	
OM143-1/2"X3/8"NPT			B		43	20	27		1/2"	3/8"	
OM143-1/2"X3/4"NPT			B		53	20	36		1/2"	3/4"	
OM143-1/2"X1"NPT			B		60	20	41		1/2"	1"	
OM143-1/2"X11/4"NPT			B		60	20	55		1/2"	1 1/4"	
OM143-3/4"X1/2"NPT			B		53	20	32		3/4"	1/2"	
OM143-3/4"X1"NPT			B		60	20	41		3/4"	1"	
OM143-3/4"X11/4"NPT			B		60	20	55		3/4"	1 1/4"	
OM143-3/4"X11/2"NPT			B		60	20	60		3/4"	1 1/2"	
OM143-1"X3/4"NPT			B		58	25	41		1"	3/4"	
OM143-1"X11/4"NPT			B		65	25	55		1"	1 1/4"	
OM143-1"X11/2"NPT			B		65	25	60		1"	1 1/2"	
OM143-11/4"X1"NPT			B		65	25	50		1 1/4"	1"	
OM143-11/4"X11/2"NPT			B		65	25	60		1 1/4"	1 1/2"	
OM143-111/2"X11/4"NPT			B		66	26	55		1 1/2"	1 1/4"	

© Copyright by O.M. Oleodinamica srl - Jesi

OM147

RACCORDO DIRITTO CON ESTREMITA' FEMMINA - Filetto Gas Cilindrico

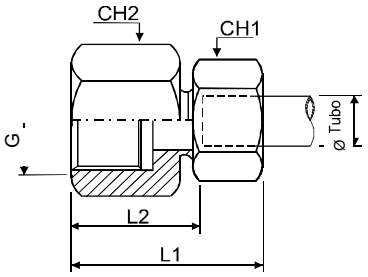

CODICE	SERIE			Ø tubo	Dimensioni (mm)								Pressione Esercizio
	LL	L	S		L1	L2			CH1	CH2		G	bar
OM147-6LR		L		6	34	19			14	14		1/8"	315
OM147-8LR		L		8	39	24			17	19		1/4"	315
OM147-10LR		L		10	40	25			19	19		1/4"	315
OM147-12LR		L		12	41	26			22	24		3/8"	315
OM147-15LR		L		15	46	31			27	27		1/2"	315
OM147-18LR		L		18	47	30.5			32	27		1/2"	315
OM147-22LR		L		22	52	35.5			36	36		3/4"	160
OM147-28LR		L		28	55	38			41	41		1"	160
OM147-35LR		L		35	63	41			50	55		1 1/4"	160
OM147-42LR		L		42	65	42.5			60	60		1 1/2"	160
OM147-6SR			S	6	41	26			17	19		1/4"	630
OM147-8SR			S	8	41	26			19	19		1/4"	630
OM147-10SR			S	10	43	26.5			22	24		3/8"	630
OM147-12SR			S	12	43	26.5			24	24		3/8"	630
OM147-14SR			S	14	50	32			27	30		1/2"	630
OM147-16SR			S	16	50	31.5			30	30		1/2"	400
OM147-20SR			S	20	56	34.5			36	36		3/4"	400
OM147-25SR			S	25	62	37.5			46	41		1"	400
OM147-30SR			S	30	69	42			50	55		1 1/4"	400
OM147-38SR			S	38	74	43.5			60	60		1 1/2"	250

© Copyright by O.M. Oleodinamica srl - Jesi

OM147

RACCORDO DIRITTO CON ESTREMITA' FEMMINA - Filetto Metrico Cilindrico

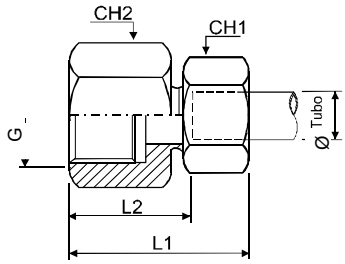

CODICE	SERIE			Ø tubo	Dimensioni (mm)								Pressione Esercizio
	LL	L	S		L1	L2				CH1	CH2	G	bar
OM147-6LM		L		6	34	19				14	14	10X1	315
OM147-8LM		L		8	39	24				17	17	12X1,5	315
OM147-10LM		L		10	40	25				19	19	14X1,5	315
OM147-12LM		L		12	41	26				22	22	16X1,5	315
OM147-15LM		L		15	46	31				27	24	18X1,5	315
OM147-18LM		L		18	47	30.5				32	30	22X1,5	315
OM147-22LM		L		22	52	35.5				36	32	26X1,5	160
OM147-28LM		L		28	55	38				41	41	33X2	160
OM147-35LM		L		35	63	41				50	55	42X2	160
OM147-42LM		L		42	65	42.5				60	60	48X2	160
OM147-6SM			S	6	41	26				17	17	12X1,5	630
OM147-8SM			S	8	41	26				19	19	14X1,5	630
OM147-10SM			S	10	43	26.5				22	22	16X1,5	630
OM147-12SM			S	12	43	26.5				24	24	18X1,5	630
OM147-14SM			S	14	50	32				27	27	20X1,5	630
OM147-16SM			S	16	50	31.5				30	30	22X1,5	400
OM147-20SM			S	20	56	34.5				36	36	27X2	400
OM147-25SM			S	25	62	37.5				46	41	33X2	400
OM147-30SM			S	30	69	42				50	55	42X2	400
OM147-38SM			S	38	74	43.5				60	60	48X2	250

© Copyright by O.M. Oleodinamica srl - Jesi

OM185

TAPPO CILINDRICO CON ESAGONO INCASSATO - Filetto Gas Cilindrico

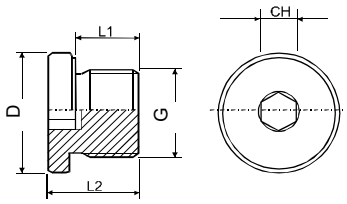

CODICE CARBONIO	SERIE			MT	Dimensioni (mm)								Pressione Esercizio
	LL	L	S	Nm	L1	L2	D		CH			G	bar
OM185-1/8"R				10	8	12	14		5			1/8"	400
OM185-1/4"R				30	12	17	19		6			1/4"	400
OM185-3/8"R				35	12	17	22		8			3/8"	400
OM185-1/2"R				60	14	19	27		10			1/2"	400
OM185-3/4"R				90	16	21	32		12			3/4"	400
OM185-1"R				140	16	22.5	40		17			1"	400
OM185-1 1/4"R				240	16	22.5	50		22			1 1/4"	250
OM185-1 1/2"R				300	16	22.5	55		24			1 1/2"	250

© Copyright by O.M. Oleodinamica srl - Jesi

OM192

TAPPO CONICO CON ESAGONO INCASSATO - Filetto Gas Conico

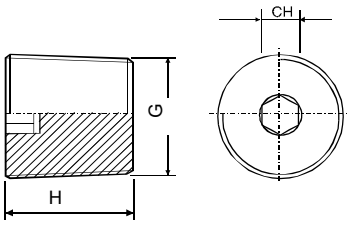

CODICE	SERIE				Dimensioni (mm)								Pressione Esercizio
	LL	L	S		H	CH						G	bar
OM192-1/8"R					9.5	1/16"						1/8"	
OM192-1/4"R					12.7	1/4"						1/4"	
OM192-3/8"R					14.3	5/16"						3/8"	
OM192-1/2"R					17.5	3/8"						1/2"	
OM192-3/4"R					20.6	9/16"						3/4"	
OM192-1"R					25.4	5/8"						1"	
OM192-1 1/4"R					31.7	3/4"						1 1/4"	
OM192-1 1/2"R					31.7	3/4"						1 1/2"	

© Copyright by O.M. Oleodinamica srl - Jesi

OM185

TAPPO CILINDRICO CON ESAGONO INCASSATO - Filetto Metrico Cilindrico

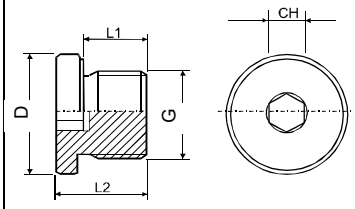

CODICE	SERIE			MT	Dimensioni (mm)								Pressione Esercizio
	LL	L	S	Nm	L1	L2	D			CH		G	bar
OM185-10X1M				10	8	12	14			5		10X1	400
OM185-12X1,5M				20	12	17	17			6		12X1,5	400
OM185-14X1,5M				30	12	17	19			6		14X1,5	400
OM185-16X1,5M				35	12	17	22			8		16X1,5	400
OM185-18X1,5M				40	12	17	22			8		18X1,5	400
OM185-20X1,5M				50	14	19	26			10		20X1,5	400
OM185-22X1,5M				60	14	19	27			10		22X1,5	400
OM185-26X1,5M				70	16	21	32			12		36X1,5	400
OM185-27X2M				90	16	21	32			12		27X2	400
OM185-33X2M				140	16	22.5	40			17		33X2	400
OM185-42X2M				240	16	22.5	50			22		42X2	250
OM185-48X2M				300	16	22.5	55			24		48X2	250

© Copyright by O.M. Oleodinamica srl - Jesi

OM185GG

TAPPO CILINDRICO CON ESAGONO INCASSATO ON GUARNIZIONE - Filetto Gas Cilindrico

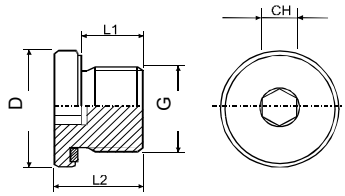

CODICE	SERIE			MT	Dimensioni (mm)							Pressione Esercizio
	LL	L	S	Nm	L1	L2	D	CH			G	bar
OM185GGGG-1/8"R				10	8	12	14	5			1/8"	400
OM185GG-1/4"R				30	12	17	19	6			1/4"	400
OM185GG-3/8"R				35	12	17	22	8			3/8"	400
OM185GG-1/2"R				60	14	19	27	10			1/2"	400
OM185GG-3/4"R				90	16	21	32	12			3/4"	400
OM185GG-1"R				140	16	22.5	40	17			1"	400
OM185GG-1 1/4"R				240	16	22.5	50	22			1 1/4"	250
OM185GG-1 1/2"R				300	16	22.5	55	24			1 1/2"	250
OM185GG-10X1M				10	8	12	14	5			10X1	400
OM185GG-12X1,5M				20	12	17	17	6			12X1,5	400
OM185GG-14X1,5M				30	12	17	19	6			14X1,5	400
OM185GG-16X1,5M				35	12	17	22	8			16X1,5	400
OM185GG-18X1,5M				40	12	17	22	8			18X1,5	400
OM185GG-20X1,5M				50	14	19	26	10			20X1,5	400
OM185GG-22X1,5M				60	14	19	27	10			22X1,5	400
OM185GG-26X1,5M				70	16	21	32	12			36X1,5	400
OM185GG-27X2M				90	16	21	32	12			27X2	400
OM185GG-33X2M				140	16	22.5	40	17			33X2	400
OM185GG-42X2M				240	16	22.5	50	22			42X2	250
OM185GG-48X2M				300	16	22.5	55	24			48X2	250

© Copyright by O.M. Oleodinamica srl - Jesi

OM192

TAPPO CONICO CON ESAGONO INCASSATO - Filetto NPTF

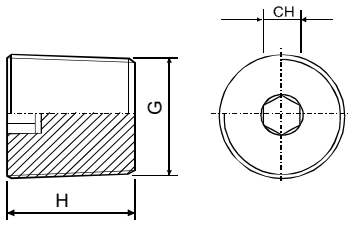

CODICE CARBONIO	SERIE				Dimensioni (mm)									
	LL	L	S		H	CH							G	
OM192-1/16"NPT					7.9	5/32"							1/16"	
OM192-1/8"NPT					7.9	3/16"							1/8"	
OM192-1/4"NPT					11.1	1/4"							1/4"	
OM192-3/8"NPT					12.7	5/16"							3/8"	
OM192-1/2"NPT					14.3	3/8"							1/2"	
OM192-3/4"NPT					15.9	9/16"							3/4"	
OM192-1 1/4"NPT					20.6	3/4"							1 1/4"	
OM192-1 1/2"NPT					20.6	1"							1 1/2"	

© Copyright by O.M. Oleodinamica srl - Jesi

OM296

TAPPO DI CHIUSURA TUBI

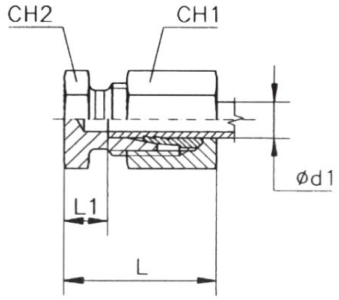

CODICE	SERIE				Dimensioni (mm)							Pressione Esercizio
	LL	L	S			L	L1	CH1	CH2		ød1	bar
OM296-6L		L				22	7	14	12		6	315
OM296-8L		L				23	8	17	14		8	315
OM296-10L		L				24	9	19	17		10	315
OM296-12L		L				25	10	22	19		12	315
OM296-15L		L				26	11	27	24		15	315
OM296-18L		L				28	11,5	32	27		18	315
OM296-22L		L				30	13,5	36	32		22	160
OM296-28L		L				31	14,5	41	41		28	160
OM296-35L		L				36	14,5	50	46		35	160
OM296-42L		L				39	16	60	55		42	160
OM296-6S			S			26	11	17	14		6	630
OM296-8S			S			28	13	19	17		8	630
OM296-10S			S			29	12,5	22	19		10	630
OM296-12S			S			31	14,5	24	22		12	630
OM296-14S			S			34	16	27	24		14	630
OM296-16S			S			34	15,5	30	27		16	400
OM296-20S			S			39	17,5	36	32		20	400
OM296-25S			S			44	20	46	41		25	400
OM296-30S			S			47	20,5	50	46		30	400
OM296-38S			S			54	23	60	55		38	315

© Copyright by O.M. Oleodinamica srl - Jesi

OM299B

OGGIVA A SALDARE CON O-RING

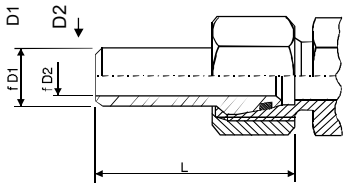

CODICE	SERIE			Øtubo	Dimensioni (mm)								Pressione Esercizio
	LL	L	S		D1	D2	L						bar
OM299B-10X2				10	10	6	33.5						400
OM299B-12X2,5				12	12	7	33.5						400
OM299B-14X3				14	14	8	40						400
OM299B-16X3				16	16	10	40.5						400
OM299B-20X4				20	20	12	47						400
OM299B-25X5				25	25	15	53.5						400
OM299B-25X4				25	25	17	53.5						315
OM299B-30X4				30	30	22	57.5						250
OM299B-30X5				30	30	20	57.5						315
OM299B-38X5				38	38	28	64.5						250
OM299B-38X6				38	38	26	64.5						315
OM299B-50X6				50	50	38	86						160
OM299B-50X7				50	50	36	86						250
OM299B-50X8				50	50	34	86						315

© Copyright by O.M. Oleodinamica srl - Jesi

OM324

TAPPO DI CHIUSURA TUBI

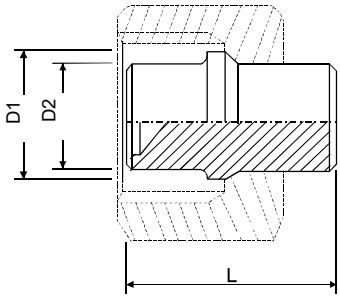

CODICE	SERIE			Øtubo	Dimensioni (mm)								
	LL	L	S		D1	D2	L						
OM324-8LS		L	S	8	12	8	19.5						
OM324-10LS		L	S	10	14	10	21						
OM324-12LS		L	S	12	16	12	22						
OM324-15L		L		15	19	15	22						
OM324-18L		L		18	22	18	24						
OM324-22L		L		22	27	22	26						
OM324-28L		L		28	33	28	26.5						
OM324-35L		L		35	41	35	32						
OM324-42L		L		42	48	42	32.5						
OM324-14S			S	14	18	14	23.5						
OM324-16S			S	16	20	16	25.5						
OM324-20S			S	20	25	20	30.5						
OM324-25S			S	25	30	25	32.5						
OM324-30S			S	30	36	30	35.5						
OM324-38S			S	38	44	38	40						

© Copyright by O.M. Oleodinamica srl - Jesi

OM403

RACCORDO PER MANOMETRO CON O-RING

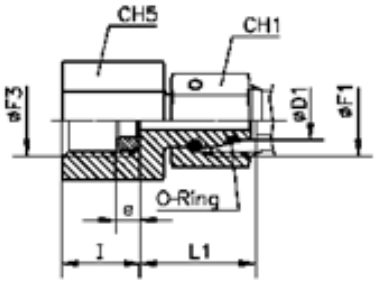

CODICE	SERIE			Tubo	Dimensioni (mm)							Pressione Esercizio
	LL	L	S	Ø D1	OR	Ø F1	L1	CH1	CH5	F3	I	bar
OM403-6L		L		6	4x1,5	12x1,5	21	14	19	1/4”	14,5	315
OM403-8L		L		8	6x1,5	14x1,5	21,5	17	19	1/4”	14,5	315
OM403-10L		L		10	7,5x1,5	16x1,5	22	19	19	1/4”	14,5	315
OM403-12L		L		12	9,5x1,5	18x1,5	22	22	19	1/4”	14,5	315
OM403-6S1/4			S	6	4x1,5	14x1,5	21,5	17	19	1/4”	14,5	630
OM403-8S1/4			S	8	6x1,5	16x1,5	22	19	19	1/4”	14,5	630
OM403-10S1/4			S	10	7,5x1,5	18x1,5	22	22	19	1/4”	14,5	630
OM403-12S1/4			S	12	9x1,5	20x1,5	23,5	24	19	1/4”	14,5	630
OM403-6S			S	6	4x1,5	14x1,5	23	17	27	1/2”	20	630
OM403-8S			S	8	6x1,5	16x1,5	23,5	19	27	1/2”	20	630
OM403-10S			S	10	7,5x1,5	18x1,5	23,5	22	27	1/2”	20	630
OM403-12S			S	12	9x1,5	20x1,5	25	24	27	1/2”	20	630

© Copyright by O.M. Oleodinamica srl - Jesi

OM417

RACCORDO ORIENTABILE A 45° CON O-RING - Filetto Metrico Cilindrico

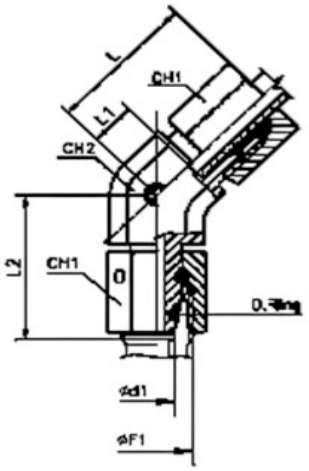

CODICE	SERIE			Tubo	Dimensioni (mm)							Pressione Esercizio
	LL	L	S	ØD1	L	L1	L2	Ø F1	CH1	CH2	O-Ring	bar
OM417-6L		L		6	24,5	9,5	26	12x1,5	14	14	4×1,5	315
OM417-8L		L		8	27	12	27.5	14x1,5	17	14	6x1,5	315
OM417-10L		L		10	27	12	29	16x1,5	19	19	7,5×1,5	315
OM417-12L		L		12	29	14	29,5	18x1,5	22	19	9×1,5	315
OM417-15L		L		15	32	17	32,5	22x1,5	27	22	12×2	315
OM417-18L		L		18	33	17	35,5	26x1,5	32	27	15×2	315
OM417-22L		L		22	35,5	19,5	38,5	30x2	36	33	20×2	160
OM417-28L		L		28	39	23	41,5	36x2	41	41	26×2	160
OM417-35L		L		35	48	27	51	45x2	50	48	32×2,5	160
OM417-42L		L		42	49	26	56	52x2	60	48	38×2,5	160
OM417-6S			S	6	26	11	27	14x1,5	17	14	4×1,5	630
OM417-8S			S	8	28	13	27,5	16x1,5	19	19	6×1,5	630
OM417-10S			S	10	29	13	30	18x1,5	22	19	7,5×1,5	630
OM417-12S			S	12	33	17	31	20x1,5	24	22	9×1,5	630
OM417-16S			S	16	34	16	36,5	24x1,5	30	27	12×2	400
OM417-20S			S	20	40	19	44,5	30x2	36	33	16,3×2,4	400
OM417-25S			S	25	46	22	50	36x2	46	41	20,3×2,4	400
OM417-30S			S	30	50	24	55	42x2	50	48	25,3×2,4	400
OM417-38S			S	38	55	24	63	52x2	60	48	33,3×2,4	315

© Copyright by O.M. Oleodinamica srl - Jesi

OM419

RACCORDO ORIENTABILE A GOMITO CON O-RING - Filetto Metrico Cilindrico

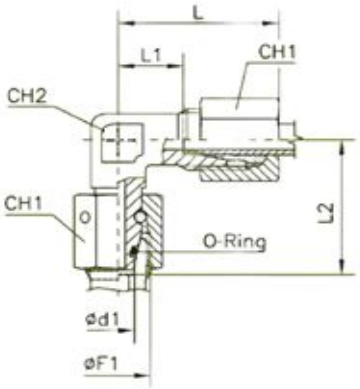

CODICE	SERIE			Tubo	Dimensioni (mm)							Pressione Esercizio
	LL	L	S	ØD1	L	L1	L2	Ø F1	CH1	CH2	O-Ring	bar
OM419-6L		L		6	27	12	26	12x1,5	14	12	4x1,5	315
OM419-8L		L		8	29	14	27,5	14x1,5	17	12	6x1,5	315
OM419-10L		L		10	30	15	29	16x1,5	19	14	7,5x1,5	315
OM419-12L		L		12	32	17	29,5	18x1,5	22	17	9x1,5	315
OM419-15L		L		15	36	21	32,5	22x1,5	27	19	12x2	315
OM419-18L		L		18	40	23,5	35,5	26x1,5	32	24	15x2	315
OM419-22L		L		22	44	27,5	38,5	30x2	36	27	20x2	160
OM419-28L		L		28	47	30,5	41,5	36x2	41	36	26x2	160
OM419-35L		L		35	56	34,5	51	45x2	50	41	32x2,5	160
OM419-42L		L		42	63	40	56	52x2	60	50	38x2,5	160
OM419-6S			S	6	31	16	27	14x1,5	17	12	4x1,5	630
OM419-8S			S	8	32	17	27,5	16x1,5	19	14	6x1,5	630
OM419-10S			S	10	34	17,5	30	18x1,5	22	17	7,5x1,5	630
OM419-12S			S	12	38	21,5	31	20x1,5	24	17	9x1,5	630
OM419-14S			S	14	40	22	35	22x1,5	27	19	10x2	630
OM419-16S			S	16	43	24,5	36,5	24x1,5	30	24	12x2	400
OM419-20S			S	20	48	26,5	44,5	30x2	36	27	16,3x2,4	400
OM419-25S			S	25	54	30	50	36x2	46	36	20,3x2,4	400
OM419-30S			S	30	62	35,5	55	42x2	50	41	25,3x2,4	400
OM419-38S			S	38	72	41	63	52x2	60	50	33,3x2,4	315

© Copyright by O.M. Oleodinamica srl - Jesi

OM420

RACCORDO ORIENTABILE A T CON O-RING - Filetto Metrico Cilindrico

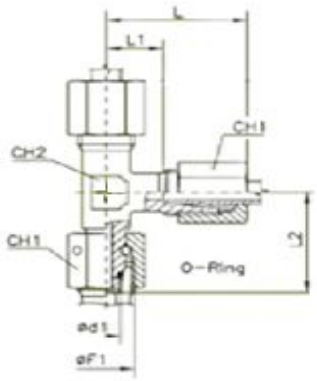

CODICE	SERIE			Tubo	Dimensioni (mm)							Pressione Esercizio
	LL	L	S	ØD1	L	L1	L2	Ø F1	CH1	CH2	O-Ring	bar
OM420-6L		L		6	27	12	26	12x1,5	14	12	4x1,5	315
OM420-8L		L		8	29	14	27,5	14x1,5	17	12	6x1,5	315
OM420-10L		L		10	30	15	29	16x1,5	19	14	7,5x1,5	315
OM420-12L		L		12	32	17	29.5	18x1,5	22	17	9X1,5	315
OM420-15L		L		15	36	21	32,5	22x1,5	27	19	12x2	315
OM420-18L		L		18	40	23,5	35,5	26x1,5	32	24	15x2	315
OM420-22L		L		22	44	27,5	38,5	30x2	36	27	20x2	160
OM420-28L		L		28	47	30,5	41,5	36x2	41	36	26x2	160
OM420-35L		L		35	56	34,5	51	45x2	50	41	32x2,5	160
OM420-42L		L		42	63	40	56	52x2	60	50	38x2,5	160
OM420-6S			S	6	31	16	27	14x1,5	17	12	4x1,5	630
OM420-8S			S	8	32	17	27,5	16x1,5	19	14	6x1,5	630
OM420-10S			S	10	34	17,5	30	18x1,5	22	17	7,5x1,5	630
OM420-12S			S	12	38	21,5	31	20x1,5	24	17	9x1,5	630
OM420-14S			S	14	40	22	35	22x1,5	27	19	10x2	630
OM420-16S			S	16	43	24,5	36,5	24x1,5	30	24	12x2	400
OM420-20S			S	20	48	26,5	44,5	30x2	36	27	16,3x2,4	400
OM420-25S			S	25	54	30	50	36x2	46	36	20,3x2,4	400
OM420-30S			S	30	62	35,5	55	42x2	50	41	25,3x2,4	400
OM420-38S			S	38	72	41	63	52x2	60	50	33,3x2,4	315

© Copyright by O.M. Oleodinamica srl - Jesi

OM421

RACCORDO ORIENTABILE A L CON O-RING - Filetto Metrico Cilindrico

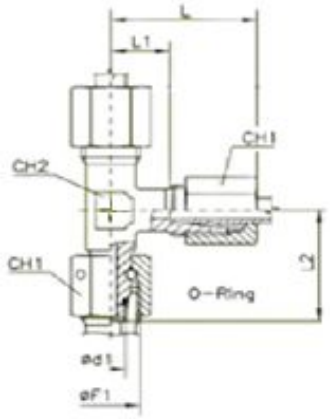

CODICE	SERIE			Tubo	Dimensioni (mm)							Pressione Esercizio
	LL	L	S	ØD1	L	L1	L2	Ø F1	CH1	CH2	O-Ring	bar
OM421-6L		L		6	27	12	26	12 x 1,5	14	12	4x1,5	315
OM421-8L		L		8	29	14	27,5	14 x 1,5	17	12	6x1,5	315
OM421-10L		L		10	30	15	29	16 x 1,5	19	14	7,5x1,5	315
OM421-12L		L		12	32	17	29,5	18 x 1,5	22	17	9x1,5	315
OM421-15L		L		15	36	21	32,5	22 x 1,5	27	19	12x2	315
OM421-18L		L		18	40	23,5	35,5	26 x 1,5	32	24	15x2	315
OM421-22L		L		22	44	27,5	38,5	30 x 2	36	27	20x2	160
OM421-28L		L		28	47	30,5	41,5	36 x 2	41	36	26x2	160
OM421-35L		L		35	56	34,5	51	45 x 2	50	41	32x2,5	160
OM421-42L		L		42	63	40	56	52 x 2	60	50	38x2,5	160
OM421-6S			S	6	31	16	27	14 x 1,5	17	12	4x1,5	630
OM421-8S			S	8	32	17	27,5	16 x 1,5	19	14	6x1,5	630
OM421-10S			S	10	34	17,5	30	18 x 1,5	22	17	7,5x1,5	630
OM421-12S			S	12	38	21,5	31	20 x 1,5	24	17	9x1,5	630
OM421-14S			S	14	40	22	35	22 x 1,5	27	19	10x2	630
OM421-16S			S	16	43	24,5	36,5	24 x 1,5	30	24	12x2	400
OM421-20S			S	20	48	26,5	44,5	30 x 2	36	27	16,3x2,4	400
OM421-25S			S	25	54	30	50	36 x 2	46	36	20,3x2,4	400
OM421-30S			S	30	62	35,5	55	42 x 2	50	41	25,3x2,4	400
OM421-38S			S	38	72	41	63	52 x 2	60	50	33,3x2,4	315

© Copyright by O.M. Oleodinamica srl - Jesi

OM426 R

RACCORDO DIRITTO PER COMBINAZIONI GUARNIZIONE GOMMA\O-RING

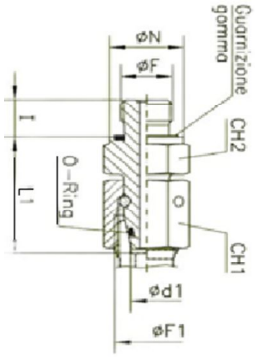

CODICE	SERIE			Tubo	Dimensioni (mm)							Pressione Esercizio
	LL	L	S	ØD1	ØF	I	CH2	Ø N	ØF1	CH1	O-Ring	bar
OM426-6LR		L		6	1/8”	8	14	14	12x1,5	14	4x1,5	315
OM426-8LR		L		8	1/4”	12	19	19	14x1,5	17	6x1,5	315
OM426-10LR		L		10	1/4”	12	19	19	16x1,5	19	7,5x1,5	315
OM426-12LR		L		12	3/8”	12	22	22	18x1,5	22	9x1,5	315
OM426-15LR		L		15	1/2”	14	27	27	22x1,5	27	12x2	315
OM426-18LR		L		18	1/2”	14	27	27	26x1,5	32	15x2	315
OM426-22LR		L		22	3/4”	16	32	32	30x2	36	20x2	160
OM426-28LR		L		28	1”	18	41	40	36x2	41	26x2	160
OM426-35LR		L		35	1”1/4	20	50	50	45x2	50	32x2,5	160
OM426-42LR		L		42	1”1/2	22	55	55	52x2	60	38x2,5	160
OM426-6SR			S	6	1/4”	12	19	19	14x1,5	17	4x1,5	630
OM426-8SR			S	8	1/4”	12	19	19	16x1,5	19	6x1,5	630
OM426-10SR			S	10	3/8”	12	22	22	18x1,5	22	7,5x1,5	630
OM426-12SR			S	12	3/8”	12	22	22	20x1,5	24	9x1,5	630
OM426-14SR			S	14	1/2”	14	27	27	22x1,5	27	10x2	630
OM426-16SR			S	16	1/2”	14	27	27	24x1,5	30	12x2	400
OM426-20SR			S	20	3/4”	16	32	32	30x2	36	16,3x2,4	400
OM426-25SR			S	25	1”	18	41	40	36x2	46	20,3x2,4	400
OM426-30SR			S	30	1”1/4	20	50	50	42x2	50	25,3x2,4	400
OM426-38SR			S	38	1”1/2	22	55	55	52x2	60	33,3x2,4	315

© Copyright by O.M. Oleodinamica srl - Jesi

OM426 M

RACCORDO DIRITTO PER COMBINAZIONI GUARNIZIONE GOMMA\O-RING

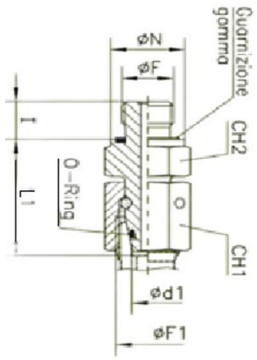

CODICE	SERIE			Tubo	Dimensioni (mm)							Pressione Esercizio
	LL	L	S	ØD1	Ø F	I	CH2	Ø N	Ø F1	CH1	O-Ring	bar
OM426-6LM		L		6	10x1	8	14	14	12x1,5	14	4x1,5	315
OM426-8LM		L		8	12x1,5	12	17	17	14x1,5	17	6x1,5	315
OM426-10LM		L		10	14x1,5	12	19	19	16x1,5	19	7,5x1,5	315
OM426-12LM		L		12	16x1,5	12	22	22	18x1,5	22	9x1,5	315
OM426-15LM		L		15	18x1,5	12	24	24	22x1,5	27	12x2	315
OM426-18LM		L		18	22x1,5	14	27	27	26x1,5	32	15x2	315
OM426-22LM		L		22	26x1,5	16	32	32	30x2	36	20x2	160
OM426-28LM		L		28	33x2	18	41	40	36x2	41	26x2	160
OM426-35LM		L		35	42x2	20	50	50	45x2	50	32x2,5	160
OM426-42LM		L		42	48x2	22	55	55	52x2	60	38x2,5	160
OM426-6SM			S	6	12x1,5	12	17	17	14x1,5	17	4x1,5	630
OM426-8SM			S	8	14x1,5	12	19	19	16x1,5	19	6x1,5	630
OM426-10SM			S	10	16x1,5	12	22	22	18x1,5	22	7,5x1,5	630
OM426-12SM			S	12	18x1,5	12	24	24	20x1,5	24	9x1,5	630
OM426-14SM			S	14	20x1,5	14	27	26	22x1,5	27	10x2	630
OM426-16SM			S	16	22x1,5	14	27	27	24x1,5	30	12x2	400
OM426-20SM			S	20	27x2	16	32	32	30x2	36	16,3x2,4	400
OM426-25SM			S	25	33x2	18	41	40	36x2	46	20,3x2,4	400
OM426-30SM			S	30	42x2	20	50	50	42x2	50	25,3x2,4	400
OM426-38SM			S	38	48x2	22	55	55	52x2	60	33,3x2,4	315

© Copyright by O.M. Oleodinamica srl - Jesi

OM432 L

RACCORDO DI RIDUZIONE SEMPLICE CON O-RING - Filetto Metrico Cilindrico

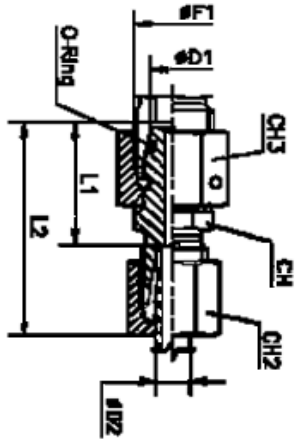

CODICE	SERIE	Tubo	Tubo	Dimensioni (mm)							Pressione Esercizio
	L	ØD1	ØD2	L1	L2	CH2	CH3	Ø F1	CH	O-Ring	bar
OM432-8/6L	L	8	6	23,5	38	14	17	14x1,5	12	6x1,5	315
OM432-10/6L	L	10	6	25	40	14	19	16x1,5	14	7,5x1,5	315
OM432-10/8L	L	10	8	25	40	17	19	16x1,5	14	7,5x1,5	315
OM432-12/6L	L	12	6	25	40	14	22	18x1,5	17	9x1,5	315
OM432-12/8L	L	12	8	25	40	17	22	18x1,5	17	9x1,5	315
OM432-12/10L	L	12	10	26	41	19	22	18x1,5	17	9x1,5	315
OM432-15/6L	L	15	6	28,5	43	14	27	22x1,5	19	12x2	315
OM432-15/8L	L	15	8	28,5	43	17	27	22x1,5	19	12x2	315
OM432-15/10L	L	15	10	29,5	44	19	27	22x1,5	19	12x2	315
OM432-15/12L	L	15	12	29,5	44	22	27	22x1,5	19	12x2	315
OM432-18/6L	L	18	6	28	43	14	32	26x1,5	24	15x2	315
OM432-18/8L	L	18	8	28	43	17	32	26x1,5	24	15x2	315
OM432-18/10L	L	18	10	29	44	19	32	26x1,5	24	15x2	315
OM432-18/12L	L	18	12	29	44	22	32	26x1,5	24	15x2	315
OM432-18/15L	L	18	15	30	45	27	32	26x1,5	24	15x2	315
OM432-22/6L	L	22	6	32	47	14	36	30x2	27	20x2	160
OM432-22/8L	L	22	8	32	47	17	36	30x2	27	20x2	160
OM432-22/10L	L	22	10	33	48	19	36	30x2	27	20x2	160
OM432-22/12L	L	22	12	33	48	22	36	30x2	27	20x2	160
OM432-22/15L	L	22	15	34	49	27	36	30x2	27	20x2	160
OM432-22/18L	L	22	18	33,5	50	32	36	30x2	27	20x2	160
OM432-28/6L	L	28	6	34	49	14	41	36x2	32	26x2	160
OM432-28/8L	L	28	8	34	49	17	41	36x2	32	26x2	160
OM432-28/10L	L	28	10	35	50	19	41	36x2	32	26x2	160
OM432-22/12L	L	28	12	35	50	22	41	36x2	32	26x2	160
OM432-28/15L	L	28	15	36	51	27	41	36x2	32	26x2	160
OM432-28/18L	L	28	18	36,5	52	32	41	36x2	32	26x2	160
OM432-28/22L	L	28	22	37,5	54	36	41	36x2	32	26x2	160
OM432-35/6L	L	35	6	37	52	14	50	45x2	41	32x2,5	160
OM432-35/8L	L	35	8	37	52	17	50	45X2	41	32X2,5	160
OM432-35/10L	L	35	10	38	53	19	50	45x2	41	32x2,5	160
OM432-35/12L	L	35	12	38	53	22	50	45x2	41	32x2,5	160
OM432-35/15L	L	35	15	39	54	27	50	45x2	41	32x2,5	160
OM432-35/18L	L	35	18	38,5	55	32	50	45x2	41	32x2,5	160
OM432-35/22L	L	35	22	40,5	57	36	50	45x2	41	32x2,5	160
OM432-35/28L	L	35	28	40,5	57	41	50	45x2	41	32x2,5	160
OM432-42/6L	L	42	6	40,5	55	14	60	52x2	50	38x2,5	160
OM432-42/8L	L	42	8	40,5	55	17	60	52x2	50	38x2,5	160
OM432-42/10L	L	42	10	41,5	56	19	60	52x2	50	38x2,5	160
OM432-42/12L	L	42	12	41,5	56	22	60	52x2	50	38x2,5	160
OM432-42/15L	L	42	15	42,5	58	27	60	52x2	50	38x2,5	160
OM432-42/18L	L	42	18	42	58	32	60	52x2	50	38x2,5	160
OM432-42/22L	L	42	22	44	60	36	60	52x2	50	38x2,5	160
OM432-42/28L	L	42	28	44	61	41	60	52x2	50	38x2,5	160
OM432-42/35L	L	42	35	43	65	50	60	52x2	50	38x2,5	160

© Copyright by O.M. Oleodinamica srl - Jesi

OM432 S

RACCORDO DI RIDUZIONE SEMPLICE CON O-RING - Filetto Metrico Cilindrico

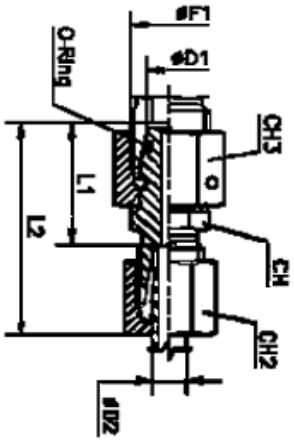

CODICE	SERIE	Tubo	Tubo	Dimensioni (mm)							Pressione Esercizio
	S	ØD1	ØD2	L1	L2	CH2	CH3	Ø F1	CH	O-Ring	bar
OM432-8/6S	S	8	6	27	42	17	19	16x1,5	14	6x1,5	630
OM432-10/6S	S	10	6	27,5	42	17	22	18x1,5	17	7,5x1,5	630
OM432-10/8S	S	10	8	27,5	42	19	22	18x1,5	17	7,5x1,5	630
OM432-12/6S	S	12	6	29	44	17	24	20x1,5	17	9x1,5	630
OM432-12/8S	S	12	8	29	44	19	24	20x1,5	17	9x1,5	630
OM432-12/10S	S	12	10	29.5	46	22	24	20x1,5	19	9x1,5	630
OM432-14/6S	S	14	6	31,5	46	17	27	22x1,5	19	10x2	630
OM432-14/8S	S	14	8	31,5	46	19	27	22x1,5	19	10x2	630
OM432-14/10S	S	14	10	31	47	22	27	22x1,5	19	10x2	630
OM432-14/12S	S	14	12	31	47	24	27	22x1,5	22	10x2	630
OM432-16/6S	S	16	6	32	47	17	30	24x1,5	22	12x2	400
OM432-16/8S	S	16	8	32	47	19	30	24x1,5	22	12x2	400
OM432-16/10S	S	16	10	31,5	48	22	30	24x1,5	22	12x2	400
OM432-16/12S	S	16	12	31,5	48	24	30	24x1,5	22	12x2	400
OM432-16/14S	S	16	14	33	51	27	30	24x1,5	24	12x2	400
OM432-20/6S	S	20	6	36	51	17	36	30x2	27	16,3x2,4	400
OM432-20/8S	S	20	8	36	51	19	36	30x2	27	16,3x2,4	400
OM432-20/10S	S	20	10	35,5	52	22	36	30x2	27	16,3x2,4	400
OM432-20/12S	S	20	12	35,5	52	24	36	30x2	27	16,3x2,4	400
OM432-20/14S	S	20	14	37	55	27	36	30x2	27	16,3x2,4	400
OM432-20/16S	S	20	16	36,5	55	30	36	30x2	27	16,3x2,4	400
OM432-25/6S	S	25	6	38,5	53	17	46	36x2	32	20,3x2,4	400
OM432-25/8S	S	25	8	38.5	53	19	46	36X2	32	20,3X2,4	400
OM432-25/10S	S	25	10	38	54	22	46	36x2	32	20,3x2,4	400
OM432-25/12S	S	25	12	38	54	24	46	36x2	32	20,3x2,4	400
OM432-25/14S	S	25	14	39,5	57	27	46	36x2	32	20,3x2,4	400
OM432-25/16S	S	25	16	39	57	30	46	36x2	32	20,3x2,4	400
OM432-25/20S	S	25	20	39	61	36	46	36x2	32	20,3x2,4	400
OM432-30/6S	S	30	6	44	59	17	50	42x2	41	25,3x2,4	400
OM432-30/8S	S	30	8	44	59	19	50	42x2	41	25,3x2,4	400
OM432-30/10S	S	30	10	43,5	60	22	50	42x2	41	25,3x2,4	400
OM432-30/12S	S	30	12	43,5	60	24	50	42x2	41	25,3x2,4	400
OM432-30/14S	S	30	14	45	63	27	50	42x2	41	25,3x2,4	400
OM432-30/16S	S	30	16	44,5	63	30	50	42x2	41	25,3x2,4	400
OM432-30/20S	S	30	20	44,5	66	36	50	42x2	41	25,3x2,4	400
OM432-30/25S	S	30	25	45	69	46	50	42x2	41	25,3x2,4	400
OM432-38/6S	S	38	6	47,5	62	17	60	52x2	50	33,3x2,4	315
OM432-38/8S	S	38	8	47,5	62	19	60	52x2	50	33,3x2,4	315
OM432-38/10S	S	38	10	47	63	22	60	52x2	50	33,3x2,4	315
OM432-38/12S	S	38	12	47	63	24	60	52x2	50	33,3x2,4	315
OM432-38/14S	S	38	14	48,5	66	27	60	52x2	50	33,3x2,4	315
OM432-38/16S	S	38	16	48	66	30	60	52x2	50	33,3x2,4	315
OM432-38/20S	S	38	20	48	70	36	60	52x2	50	33,3x2,4	315
OM432-38/25S	S	38	25	48,5	73	46	60	52x2	50	33,3x2,4	315
OM432-38/30S	S	38	30	49	76	50	60	52x2	50	33,3x2,4	315

© Copyright by O.M. Oleodinamica srl - Jesi

OM498

RACCORDO INTERMEDIO DIRITTO CON O-RING

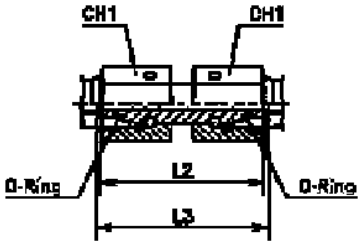

CODICE	SERIE			Tubo	Dimensioni (mm)						Pressione Esercizio
	LL	L	S	ØD1		L2	L3		CH1	O-Ring	bar
OM498-6L		L		6		34	35		14	4x1,5	315
OM498-8L		L		8		34	35		17	6x1,5	315
OM498-10L		L		10		36	37		19	7,5x1,5	315
OM498-12L		L		12		36	37		22	9x1,5	315
OM498-15L		L		15		39	40		27	12x2	315
OM498-18L		L		18		40,5	41,5		32	15x2	315
OM498-22L		L		22		45	46		36	20x2	160
OM498-28L		L		28		47	48		41	26x2	160
OM498-35L		L		35		53	56		50	32x2,5	160
OM498-42L		L		42		53	57		60	38x2,5	160
OM498-6S			S	6		37	38		17	4x1,5	630
OM498-8S			S	8		37	38		19	6x1,5	630
OM498-10S			S	10		41	43		22	7,5x1,5	630
OM498-12S			S	12		42	44		24	9x1,5	630
OM498-14S			S	14		45	48		27	10x2	630
OM498-16S			S	16		46	49		30	12x2	400
OM498-20S			S	20		55	59		36	16,3x2,4	400
OM498-25S			S	25		58	65		46	20,3x2,4	400
OM498-30S			S	30		62	71		50	25,3x2,4	400
OM498-38S			S	38		67	82		60	33,3x2,4	315

© Copyright by O.M. Oleodinamica srl - Jesi

OM514 R

RACCORDO ORIENTABILE A GOMITO CON CONTRODADO - Filetto Gas Cilindrico

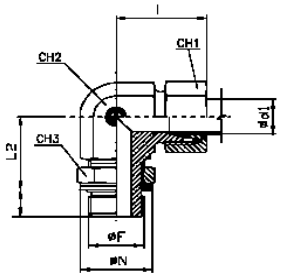

CODICE	SERIE	Tubo	Dimensioni (mm)								Pressione Esercizio
		ØD1	L2	I	Ø F	Ø N	CH1	CH2	CH3	O-Ring	bar
OM514-4LLR	LL	4	20,7	6.3	1/8”	16	10	11	14	7,97×1,88	250
OM514-6LLR	LL	6	20,7	6.3	1/8”	16	12	11	14	7,97×1,88	250
OM514-6LR	L	6	20,2	6.3	1/8”	16	14	14	14	7,97×1,88	315
OM514-8LR	L	8	22,5	9.5	1/4”	20,5	17	14	19	10,77×2,62	315
OM514-10LR	L	10	24,5	9.5	1/4”	20,5	19	19	19	10,77×2,62	315
OM514-12LR	L	12	27,5	9.5	3/8”	24	22	19	22	13,94×2,62	250
OM514-15LR	L	15	30	13	1/2”	29	27	22	27	17,86×2,62	250
OM514-18LR	L	18	36,5	13	1/2”	29	32	27	27	17,86×2,62	250
OM514-22LR	L	22	37,5	13	3/4”	35	36	33	36	23,47×2,62	160
OM514-28LR	L	28	41	16	1”	44,5	41	41	41	29,74×3,53	160
OM514-35LR	L	35	49	16	1”1/4	53	50	48	50	37,69×3,53	160
OM514-42LR	L	42	51	16	1”1/2	58,5	60	48	55	44,04×3,53	160
OM514-6SR	S	6	22,5	9.5	1/4”	20,5	17	14	19	10,77×2,62	315
OM514-8SR	S	8	26,5	9.5	1/4”	20,5	19	19	19	10,77×2,62	315
OM514-10SR	S	10	28,5	9.5	3/8”	24	22	19	22	13,94×2,62	250
OM514-12SR	S	12	28,5	9.5	3/8”	24	24	22	22	13,94×2,62	250
OM514-16SR	S	16	36	13	1/2”	29	30	27	27	17,86×2,62	250
OM514-20SR	S	20	38	13	3/4”	35	36	33	36	23,47×2,62	250
OM514-25SR	S	25	41	16	1”	44,5	46	41	41	29,74×3,53	250
OM514-30SR	S	30	48	16	1”1/4	53	50	48	50	37,69×3,53	160
OM514-38SR	S	38	53	16	1”1/2	58,5	60	48	55	44,04×3,53	160

© Copyright by O.M. Oleodinamica srl - Jesi

OM514 M

RACCORDO ORIENTABILE A GOMITO CON CONTRODADO - Filetto Metrico Cilindrico

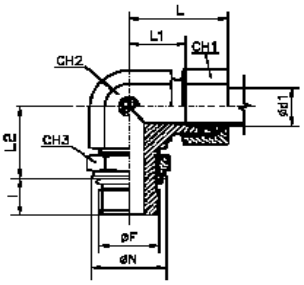

CODICE	SERIE	Tubo	Dimensioni (mm)								Pressione Esercizio
		ØD1	L	l	Ø F	Ø N	CH1	CH2	CH3	O-Ring	bar
OM514-4LLM10×1	LL	4	21,5	8.5	10×1	15	10	11	14	8,1×1,6	250
OM514-6LLM10×1	LL	6	25	8.5	10×1	15	12	14	14	8,1×1,6	250
OM514-6LLM12×1,5	LL	6	25	11	12×1,5	18	12	14	17	9,3×2,2	250
OM514-6LM	L	6	29	8.5	10×1	15	14	14	14	8,1×1,6	315
OM514-8LM	L	8	31	11	12×1,5	18	17	14	17	9,3×2,2	315
OM514-10LM	L	10	32	11	14×1,5	20	19	19	19	11,3×2,2	315
OM514-12LM	L	12	34	11,5	16×1,5	23	22	19	22	13,3×2,2	250
OM514-15LM	L	15	36	12,5	18×1,5	25	27	22	24	15,3×2,2	250
OM514-18LM	L	18	40	12,5	22×1,5	28	32	27	27	19,3×2,2	250
OM514-22LM	L	22	44	15,5	27×2	33	36	33	32	23,6×2,9	160
OM514-28LM	L	28	47	15,5	33×2	42	41	41	41	29,6×2,9	160
OM514-35LM	L	35	59	15,5	42×2	51	50	48	50	38,6×2,9	160
OM514-42LM	L	42	61	17	48×2	56	60	48	55	44,6×2,9	160
OM514-6SM	S	6	30,5	11	12×1,5	18	17	14	17	9,3×2,2	400
OM514-8SM	S	8	33	11	14×1,5	20	19	19	19	11,3×2,2	400
OM514-10SM	S	10	34	12,5	16×1,5	23	22	19	22	13,3×2,2	400
OM514-12SM	S	12	38	14	18×1,5	25	24	22	24	15,3×2,2	400
OM514-16SM	S	16	43	14,5	22×1,5	28	30	27	27	19,3×2,2	400
OM514-20SM	S	20	49	16	27×2	33	36	33	32	23,6×2,9	400
OM514-25SM	S	25	54,5	16	33×2	42	46	41	41	29,6×2,9	315
OM514-30SM	S	30	62	18	42×2	51	50	48	50	38,6×2,9	250
OM514-38SM	S	38	65	20	48×2	56	60	48	55	44,6×2,9	200

© Copyright by O.M. Oleodinamica srl - Jesi

OM515 R

RACCORDO ORIENTABILE A T CON CONTRODADO - Filetto Gas Cilindrico

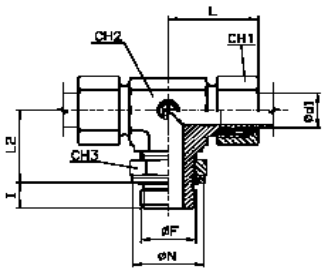

CODICE	SERIE	Tubo	Dimensioni (mm)								Pressione Esercizio
		ØD1	L1	L2	Ø F	Ø N	CH1	CH2	CH3	O-Ring	bar
OM515-6LR	L	6	14	20,2	1/8”	16	14	14	14	7,97×1,88	315
OM515-8LR	L	8	16	22,5	1/4”	20,5	17	14	19	10,77×2,62	315
OM515-10LR	L	10	17	24,5	1/4”	20,5	19	19	19	10,77×2,62	315
OM515-12LR	L	12	19	27,5	3/8”	24	22	19	22	13,94×2,62	250
OM515-15LR	L	15	21	30	1/2”	29	27	22	27	17,86×2,62	250
OM515-18LR	L	18	24	36,5	1/2”	29	32	27	27	17,86×2,62	250
OM515-22LR	L	22	28	37,5	3/4”	35	36	33	36	23,47×2,62	160
OM515-28LR	L	28	31	41	1”	44,5	41	41	41	29,74×3,53	160
OM515-35LR	L	35	38	49	1”1/4	53	50	48	50	37,69×3,53	160
OM515-42LR	L	42	38	51	1”1/2	58,5	60	48	55	44,04×3,53	160
OM515-6SR	S	6	15,5	22,5	1/4”	20,5	17	14	19	10,77×2,62	315
OM515-8SR	S	8	18	26,5	1/4”	20,5	19	19	19	10,77×2,62	315
OM515-10SR	S	10	18	28,5	3/8”	24	22	19	22	13,94×2,62	250
OM515-12SR	S	12	22	28,5	3/8”	24	24	22	22	13,94×2,62	250
OM515-16SR	S	16	25	36	1/2”	29	30	27	27	17,86×2,62	250
OM515-20SR	S	20	28	38	3/4”	35	36	33	36	23,47×2,62	250
OM515-25SR	S	25	30,5	41	1”	44,5	46	41	41	29,74×3,53	250
OM515-30SR	S	30	36	48	1”1/4	53	50	48	50	37,69×3,53	160
OM515-38SR	S	38	34	53	1”1/2	58,5	60	48	55	44,04×3,53	160

© Copyright by O.M. Oleodinamica srl - Jesi

OM515 M

RACCORDO ORIENTABILE A T CON CONTRODADO - Filetto Metrico Cilindrico

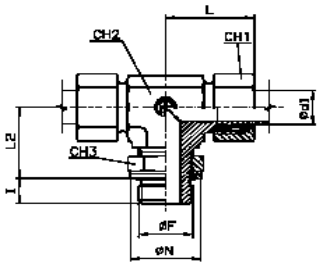

CODICE	SERIE	Tubo	Dimensioni (mm)								Pressione Esercizio
		ØD1	L	L2	Ø F	Ø N	CH1	CH2	CH3	O-Ring	bar
OM515-6LM	L	6	29	19	10×1	15	14	14	14	8,1×1,6	315
OM515-8LM	L	8	31	21	12×1,5	18	17	14	17	9,3×2,2	315
OM515-10LM	L	10	32	24	14×1,5	20	19	19	19	11,3×2,2	315
OM515-12LM	L	12	34	24,5	16×1,5	23	22	19	22	13,3×2,2	250
OM515-15LM	L	15	36	28,5	18×1,5	25	27	22	24	15,3×2,2	250
OM515-18LM	L	18	40	32,5	22×1,5	28	32	27	27	19,3×2,2	250
OM515-22LM	L	22	44	34	27×2	33	36	33	32	23,6×2,9	160
OM515-28LM	L	28	47	38,5	33×2	42	41	41	41	29,6×2,9	160
OM515-35LM	L	35	59	46,5	42×2	51	50	48	50	38,6×2,9	160
OM515-42LM	L	42	61	48	48×2	56	60	48	55	44,6×2,9	160
OM515-6SM	S	6	30,5	22	12×1,5	18	17	14	17	9,3×2,2	400
OM515-8SM	S	8	33	25	14×1,5	20	19	19	19	11,3×2,2	400
OM515-10SM	S	10	34	25,5	16×1,5	23	22	19	22	13,3×2,2	400
OM515-12SM	S	12	38	29	18×1,5	25	24	22	24	15,3×2,2	400
OM515-16SM	S	16	43	35,5	22×1,5	28	30	27	27	19,3×2,2	400
OM515-20SM	S	20	49	37,5	27×2	33	36	33	32	23,6×2,9	400
OM515-25SM	S	25	54,5	41	33×2	42	46	41	41	29,6×2,9	315
OM515-30SM	S	30	62	50	42×2	51	50	48	50	38,6×2,9	250
OM515-38SM	S	38	65	49	48×2	56	60	48	55	44,6×2,9	200

© Copyright by O.M. Oleodinamica srl - Jesi

OM516 R

RACCORDO ORIENTABILE A L CON CONTRODADO - Filetto Gas Cilindrico

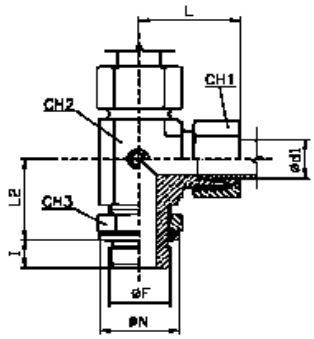

CODICE	SERIE	Tubo	Dimensioni (mm)								Pressione Esercizio
		ØD1	L	L2	Ø F	Ø N	CH1	CH2	CH3	O-Ring	bar
OM516-6LR	L	6	29	20,2	1/8”	16	14	14	14	7,97×1,88	315
OM516-8LR	L	8	31	22,5	1/4”	20,5	17	14	19	10,77×2,62	315
OM516-10LR	L	10	32	24,5	1/4”	20,5	19	19	19	10,77×2,62	315
OM516-12LR	L	12	34	27,5	3/8”	24	22	19	22	13,94×2,62	250
OM516-15LR	L	15	36	30	1/2”	29	27	22	27	17,86×2,62	250
OM516-18LR	L	18	40	36,5	1/2”	29	32	27	27	17,86×2,62	250
OM516-22LR	L	22	44	37,5	3/4”	35	36	33	36	23,47×2,62	160
OM516-28LR	L	28	47	41	1”	44,5	41	41	41	29,74×3,53	160
OM516-35LR	L	35	59	49	1” 1/4	53	50	48	50	37,69×3,53	160
OM516-42LR	L	42	61	51	1” 1/2	58,5	60	48	55	44,04×3,53	160
OM516-6SR	S	6	30,5	22,5	1/4”	20,5	17	14	19	10,77×2,62	315
OM516-8SR	S	8	33	26,5	1/4”	20,5	19	19	19	10,77×2,62	315
OM516-10SR	S	10	34	28,5	3/8”	24	22	19	22	13,94×2,62	250
OM516-12SR	S	12	38	28,5	3/8”	24	24	22	22	13,94×2,62	250
OM516-16SR	S	16	43	36	1/2”	29	30	27	27	17,86×2,62	250
OM516-20SR	S	20	49	38	3/4”	35	36	33	36	23,47×2,62	250
OM516-25SR	S	25	54,5	41	1”	44,5	46	41	41	29,74×3,53	250
OM516-30SR	S	30	62	48	1” 1/4	53	50	48	50	37,69×3,53	160
OM516-38SR	S	38	65	53	1” 1/2	58,5	60	48	55	44,04×3,53	160

© Copyright by O.M. Oleodinamica srl - Jesi

OM516 M

RACCORDO ORIENTABILE A L CON CONTRODADO - Filetto Metrico Cilindrico

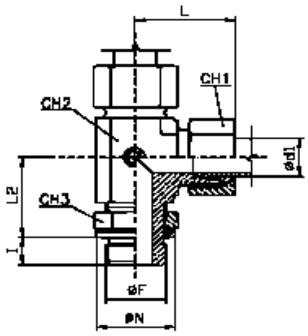

CODICE	SERIE	Tubo	Dimensioni (mm)								
		ØD1	L	L2	Ø F	Ø N	CH1	CH2	CH3	O-Ring	
OM516-6LM	L	6	29	19	10×1	15	14	14	14	8,1×1,6	
OM516-8LM	L	8	31	21	12×1,5	18	17	14	17	9,3×2,2	
OM516-10LM	L	10	32	24	14×1,5	20	19	19	19	11,3×2,2	
OM516-12LM	L	12	34	24,5	16×1,5	23	22	19	22	13,3×2,2	
OM516-15LM	L	15	36	28,5	18×1,5	25	27	22	24	15,3×2,2	
OM516-18LM	L	18	40	32,5	22×1,5	28	32	27	27	19,3×2,2	
OM516-22LM	L	22	44	34	27×2	33	36	33	32	23,6×2,9	
OM516-28LM	L	28	47	38,5	33×2	42	41	41	41	29,6×2,9	
OM516-35LM	L	35	59	46,5	42×2	51	50	48	50	38,6×2,9	
OM516-42LM	L	42	61	48	48×2	56	60	48	55	44,6×2,9	
OM516-6SM	S	6	30,5	22	12×1,5	18	17	14	17	9,3×2,2	
OM516-8SM	S	8	33	25	14×1,5	20	19	19	19	11,3×2,2	
OM516-10SM	S	10	34	25,5	16×1,5	23	22	19	22	13,3×2,2	
OM516-12SM	S	12	38	29	18×1,5	25	24	22	24	15,3×2,2	
OM516-16SM	S	16	43	35,5	22×1,5	28	30	27	27	19,3×2,2	
OM516-20SM	S	20	49	37,5	27×2	33	36	33	32	23,6×2,9	
OM516-25SM	S	25	54,5	41	33×2	42	46	41	41	29,6×2,9	
OM516-30SM	S	30	62	50	42×2	51	50	48	50	38,6×2,9	
OM516-38SM	S	38	65	49	48×2	56	60	48	55	44,6×2,9	

© Copyright by O.M. Oleodinamica srl - Jesi

OM517 R

RACCORDO ORIENTABILE A 45° CON CONTRODADO - Filetto Gas Cilindrico

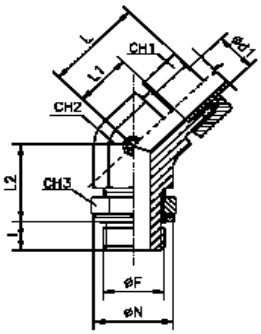

CODICE	SERIE	Tubo	Dimensioni (mm)								Pressione Esercizio
		ØD1	L	L2	Ø F	Ø N	CH1	CH2	CH3	O-Ring	bar
OM517-6LR	L	6	24,5	21,7	1/8”	16	14	14	14	7,97×1,88	315
OM517-8LR	L	8	27	19,5	1/4”	20,5	17	14	19	10,77×2,62	315
OM517-10LR	L	10	27	24,5	1/4”	20,5	19	19	19	10,77×2,62	315
OM517-12LR	L	12	29	27,5	3/8”	24	22	19	22	13,94×2,62	250
OM517-15LR	L	15	32	26	1/2”	29	27	22	27	17,86×2,62	250
OM517-18LR	L	18	33	32	1/2”	29	32	27	27	17,86×2,62	250
OM517-22LR	L	22	35,5	37,5	3/4”	35	36	33	36	23,47×2,62	160
OM517-28LR	L	28	39	36	1“	44,5	41	41	41	29,74×3,53	160
OM517-35LR	L	35	48	38	1“1/4	53	50	48	50	37,69×3,53	160
OM517-42LR	L	42	49	38	1“1/2	58,5	60	48	55	44,04×3,53	160
OM517-6SR	S	6	26	18,5	1/4“	20,5	17	14	19	10,77×2,62	315
OM517-8SR	S	8	28	22,5	1/4“	20,5	19	19	19	10,77×2,62	315
OM517-10SR	S	10	29	24,5	3/8“	24	22	19	22	13,94×2,62	250
OM517-12SR	S	12	33	24,5	3/8“	24	24	22	22	13,94×2,62	250
OM517-16SR	S	16	34	31	1/2“	29	30	27	27	17,86×2,62	250
OM517-20SR	S	20	40	33	3/4“	35	36	33	36	23,47×2,62	250
OM517-25SR	S	25	46	35	1“	44,5	46	41	41	29,74×3,53	250
OM517-30SR	S	30	50	37	1“1/4	53	50	48	50	37,69×3,53	160
OM517-38SR	S	38	55	37	1“1/2	58,5	60	48	55	44,04×3,53	160

© Copyright by O.M. Oleodinamica srl - Jesi

OM517 M

RACCORDO ORIENTABILE A 45° CON CONTRODADO - Filetto Metrico Cilindrico

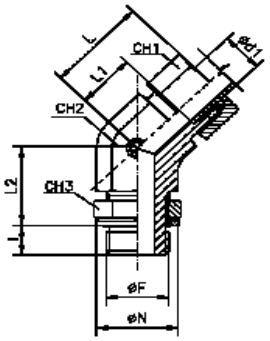

CODICE	SERIE	Tubo	Dimensioni (mm)								Pressione Esercizio
		ØD1	L	L2	Ø F	Ø N	CH1	CH2	CH3	O-Ring	bar
OM517-6LM	L	6	29	19	10×1	15	14	14	14	8,1×1,6	315
OM517-8LM	L	8	31	21	12×1,5	18	17	14	17	9,3×2,2	315
OM517-10LM	L	10	32	24	14×1,5	20	19	19	19	11,3×2,2	315
OM517-12LM	L	12	34	24,5	16×1,5	23	22	19	22	13,3×2,2	250
OM517-15LM	L	15	36	28,5	18×1,5	25	27	22	24	15,3×2,2	250
OM517-18LM	L	18	40	32,5	22×1,5	28	32	27	27	19,3×2,2	250
OM517-22LM	L	22	44	34	27×2	33	36	33	32	23,6×2,9	160
OM517-28LM	L	28	47	38,5	33×2	42	41	41	41	29,6×2,9	160
OM517-35LM	L	35	59	46,5	42×2	51	50	48	50	38,6×2,9	160
OM517-42LM	L	42	61	48	48×2	56	60	48	55	44,6×2,9	160
OM517-6SM	S	6	30,5	22	12×1,5	18	17	14	17	9,3×2,2	400
OM517-8SM	S	8	33	25	14×1,5	20	19	19	19	11,3×2,2	400
OM517-10SM	S	10	34	25,5	16×1,5	23	22	19	22	13,3×2,2	400
OM517-12SM	S	12	38	29	18×1,5	25	24	22	24	15,3×2,2	400
OM517-16SM	S	16	43	35,5	22×1,5	28	30	27	27	19,3×2,2	400
OM517-20SM	S	20	49	37,5	27×2	33	36	33	32	23,6×2,9	400
OM517-25SM	S	25	54,5	41	33×2	42	46	41	41	29,6×2,9	315
OM517-30SM	S	30	62	50	42×2	51	50	48	50	38,6×2,9	250
OM517-38SM	S	38	65	49	48×2	56	60	48	55	44,6×2,9	200

© Copyright by O.M. Oleodinamica srl - Jesi

Sede: 60035 JESI (AN) - Via G. di Vittorio, 9 - Tel 0731 207231 - Fax 0731 64312

Filiale: 41100 MODENA - Via Respighi, 78 - Tel 059 270966 - Fax 059 3680302

e-mail: om@omoleodinamica.com - www.omoleodinamica.com - C.F. e P.IVA 00478760424