OLEODINAMICA

CATALOGO VARIO

CATALOGO COMPONENTI VARI PER OLEODINAMICA

REV. 02

Sede: 60035 JESI (AN) Via G. di Vittorio, 9 – Tel 0731 207231 - Fax 0731 64312
Filiale: 41100 MODENA – Via Respighi, 78 – Tel 059 270966 – Fax 059 3680302
e-mail: om@omoleodinamica.com - www.omoleodinamica.com C.F. e P.IVA 00478760424

Indice:

1,2,3 - FLANGE
4,5,6 - CONTROFLANGE
7 - FLANGIA CIECA
8,9 - FLANGE A 90°
10,11 - FLANGE FILETTO ESTERNO GAS
12 - RACCORDO SERIE RG
13 - RACCORDI ALLUMINIO 90° SERIE BK
14,15 - SEMIFLANGE SERIE 3000 psi
da 16 a 20 - RUBINETTI
da 21 a 27 - FASCETTE (FERRO e PLASTICA)
da 28 a 31 - RONDELLE ALL, RAME, BONDED
32,33,34 - MANOMETRI
35 - BOX O-RING
36,37,38 - O-RING METRICI, POLLICI E AL VITON
da 39 a 43 - RACCORDI FORGIATI
da 44 a 47 - SEEGER ESTERNI ED INTERNI
48 - OLIO PER OLEODINAMICA
48,50 - ARTICOLI PER IDROPULITRICI
da 51 a 54 - TAPPI
55 - INDICATORE DI LIVELLO
56 - TAPPI DI CARICO IN PLASTICA
57 - SFIATI ARIA PER SERBATOI - FS
58 - TAPPI TCO
da 59 a 62 - VALVOLA D' INTERCETTAZIONE
63,64 - POMPE AD INGRANAGGI
da 65 a 68 - CILINDRO DOPPIO
69,70 - TESTATA DI GUIDA
71 - PISTONE
72 - FONDELLO

da 73 a 78 - POMPE
79 - CARTUCCE DI RICAMBIO PER FILTRI
80,81 - FILTRI FIO
82,83 - FILTRI FLS
da 84 a 87 - FILTRI FRCA
88,89 - FILTRI FIOA
90,91 - FILTRI FLA
da 92 a 95 - FILTRI FACA
96,97 - FILTRI FIR
98,99,100 - GIUNTI DENTATI
da 101 a 104 - GIUNTI ELASTICI
da 105 a 114 - VALVOLE DI BILANCIAMENTO E BLOCCO
115 - VALVOLE DI SEQUENZA AD AZIONE DIRETTA
116 - VALVOLE NON RITORNO IN LINEA
117 - VALVOLA SELETTRICE
118,119 - VALVOLE DI RITEGNO PILOTATE
120 - REGOLATORE DI FLUSSO COMPENSATO
121,122 - VALVOLA DIVISORE E RIUNIFICATORE DI FLUSSO
123,124 - GIUNTI GIREVOLI
125 - INNESTI RAPIDI A VITEDA 1/4" A 3"
126 - INNESTI RAPIDI A VALVOLADA 1/4" A 3"
da 127 a 130 - INNESTI RAPIDI - STUCCHI
da 131 a 134 - INNESTI RAPIDI - FACCIA PIANA - FASTER
da 135 a 138 - INNESTI RAPIDI - A VITE - FASTER
139 - INNESTI RAPIDI - A SPILLO - FASTER
140,141 - INNESTI RAPIDI - SEREI "NORMALE"
142,143 - INNESTI RAPIDI - SEREI "AGRICOLA"
144 - TAPPI DI PROTEZIONE PER INNESTI - FASTER

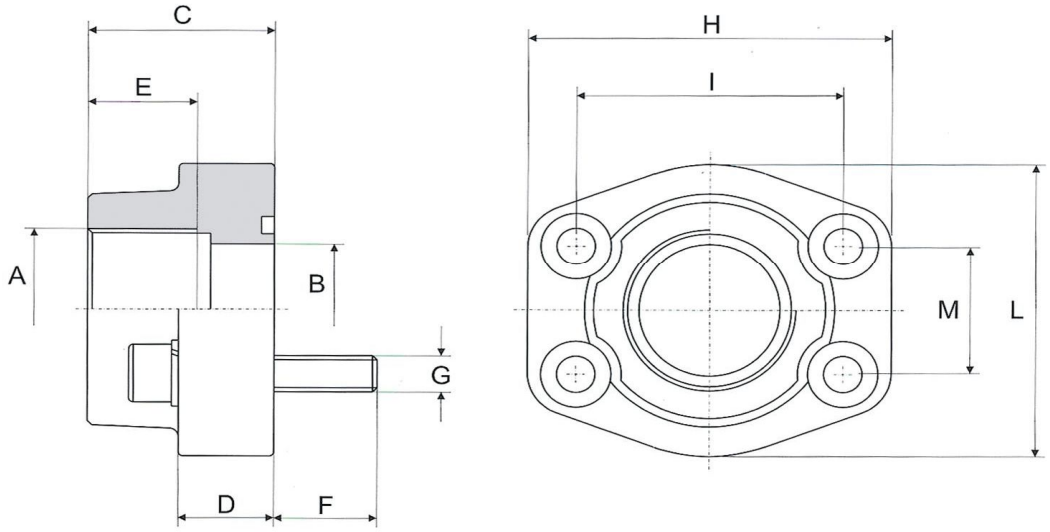

SERIE 3000 psi

CODICE	BAR	A S.A.E	B	C	D	E	F	G Viti / Metr.	Bolts UNC	H	I	L	M	O-RING
CFS080G	348	3/8"	13	36	16	13	14	M 8	5/16"	57	38	47	17.5	4075
CFS080G	348	1/2"	13	36	16	15	14	M 8	5/16"	57	38	47	17.5	4075
CFS100G	348	3/4"	19	36	18	18	16	M 10	3/8"	66	47.6	49	22.2	4100
CFS102G	348	1"	25	38	18	20	16	M 10	3/8"	71	52.4	53	26.2	4131
CFS104G	278	1"1/4	31	41	21	22	18	M 10	7/16"	80	58.7	69	30.2	4150
CFS106G	210	1"1/2	38	44	25	24	18	M 12	1/2"	94	69.85	77	35.7	4187
CFS108G	210	2"	50	45	25	26	18	M 12	1/2"	103	77.8	89	42.9	4225
CFS110G	175	2"1/2	63	50	25	30	18	M 12	1/2"	115	89	101	50.8	4275
CFS112G	138	3"	73	50	27	30	25	M 16	5/8"	135	106.4	124	62	4337
CFS114G	35	3"1/2	89	50	27	30	25	M 16	5/8"	152	120.7	136	70	4387
CFS116G	35	4"	99	50	27	30	25	M 16	5/8"	162	130	146	77.8	4437
CFS118G	35	5"	120	50	28	30	25	M 16	5/8"	184	152.4	180	92	4537

SERIE 6000 psi

CODICE	BAR	A S.A.E	B	C	D	E	F	G Viti / Metr.	Bolts UNC	H	I	L	M	O-RING
CFS401G	420	3/8"	13	36	16	13	14	M 8	5/16"	57	40.5	47	18.3	4075
CFS401G	420	1/2"	13	36	16	15	14	M 8	5/16"	57	40.5	47	18.3	4075
CFS402G	420	3/4"	19	36	19	18	16	M 10	3/8"	71	50.8	53	23.8	4100
CFS403G	420	1"	25	44	24	20	19	M 12	7/16"	80	57.1	69	27.8	4131
CFS404G	420	1"1/4	31	44	27	22	22	M 14	1/2"	94	66.7	77	31.6	4150
CFS405G	420	1"1/2	38	51	30	24	24	M 16	5/8"	106	79.4	89	36.5	4187
CFS406G	420	2"	50	70	37	33	32	M 20	3/4"	135	96.8	116	44.4	4225
CFS408G	420	2"1/2	63	75	45	35	40	M 24		166	123.8	150	58.7	4275
CFS410G	420	3"	73	90	55	40	55	M30		208	152.4	178	71.4	4337

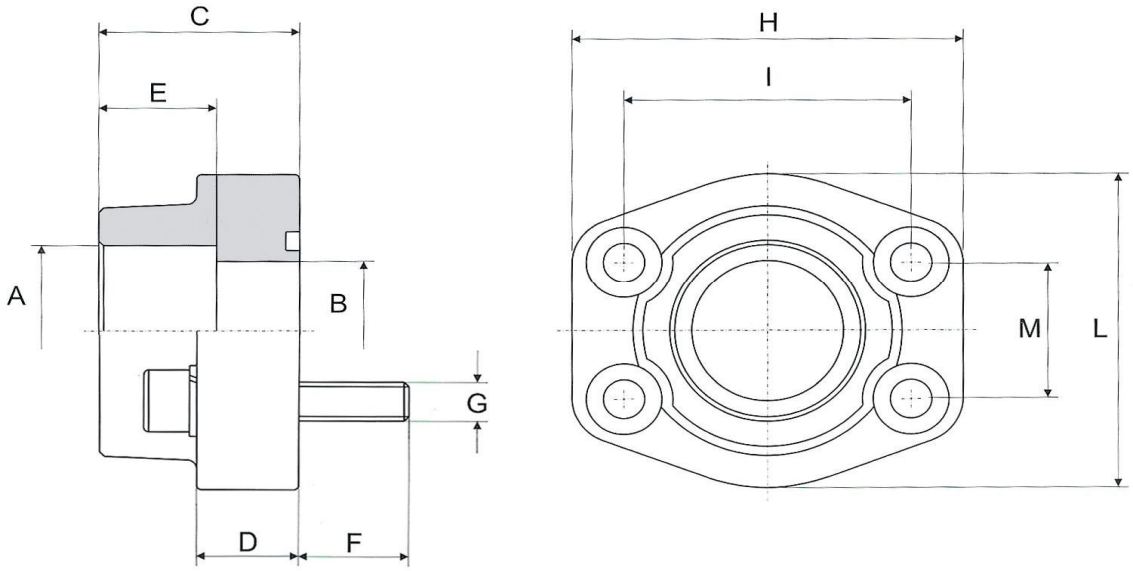

SERIE 3000 psi

CODICE	BAR	A	S.A.E	B	C	D	E	F	G Viti / Bolts Metr.	UNC	H	I	L	M	O-RING
CFS080S	348	17.5	3/8"	13	36	16	18	14	M 8	5/16"	57	38	47	17.5	4075
CFS080S	348	21.6	1/2"	13	36	16	18	14	M 8	5/16"	57	38	47	17.5	4075
CFS100S	348	27.2	3/4"	19	36	18	18	16	M10	3/8"	66	47.6	49	22.2	4100
CFS102S	348	34.1	1"	25	38	18	18	16	M10	3/8"	70	52.4	53	26.2	4131
CFS104S	278	42.8	1"1/4	31	41	21	20	18	M10	7/16"	80	58.7	69	30.2	4150
CFS106S	210	48.6	1"1/2	38	44	25	22	18	M12	1/2"	94	69.85	77	35.7	4187
CFS108S	210	61	2"	50	45	25	24	18	M12	1/2"	103	77.8	89	42.9	4225
CFS110S	175	76.6	2"1/2	63	50	25	28	18	M12	1/2"	115	89	101	50.8	4275
CFS112S	138	90.5	3"	73	50	27	28	25	M16	5/8"	135	106.4	124	62	4337
CFS114S	35	103	3"1/2	89	50	27	28	25	M16	5/8"	153	120.7	137	70	4387
CFS116S	35	115.5	4"	99	50	27	28	25	M16	5/8"	163	130	147	77.8	4437
CFS118S	35	142	5"	120	50	28	28	25	M16	5/8"	184	152.4	180	92	4537

SERIE 6000 psi

CODICE	BAR	A	S.A.E	B	C	D	E	F	G Viti / Bolts Metr.	UNC	H	I	L	M	O-RING
CFS401S	420	17.5	3/8"	13	36	16	18	14	M 8	5/16"	57	40.5	47	18.3	4075
CFS401S	420	21.6	1/2"	13	36	16	18	14	M 8	5/16"	57	40.5	47	18.3	4075
CFS402S	420	27.2	3/4"	19	36	19	20	16	M10	3/8"	71	50.8	53	23.8	4100
CFS403S	420	34.1	1"	25	44	24	22	19	M12	7/16"	80	57.1	66	27.8	4131
CFS404S	420	42.8	1"1/4	31	44	27	22	22	M14	1/2"	94	66.7	77	31.6	4150
CFS405S	420	48.6	1"1/2	38	51	30	24	24	M16	5/8"	106	79.4	89	36.5	4187
CFS406S	420	61	2"	50	70	37	25	32	M20	3/4"	135	96.8	116	44.4	4225
CFS408S	420	76.6	2"1/2	63	75	45	28	40	M24		166	123.8	150	58.7	4275
CFS410S	420	90.5	3"	73	90	55	30	55	M30		208	152.4	178	71.4	4337

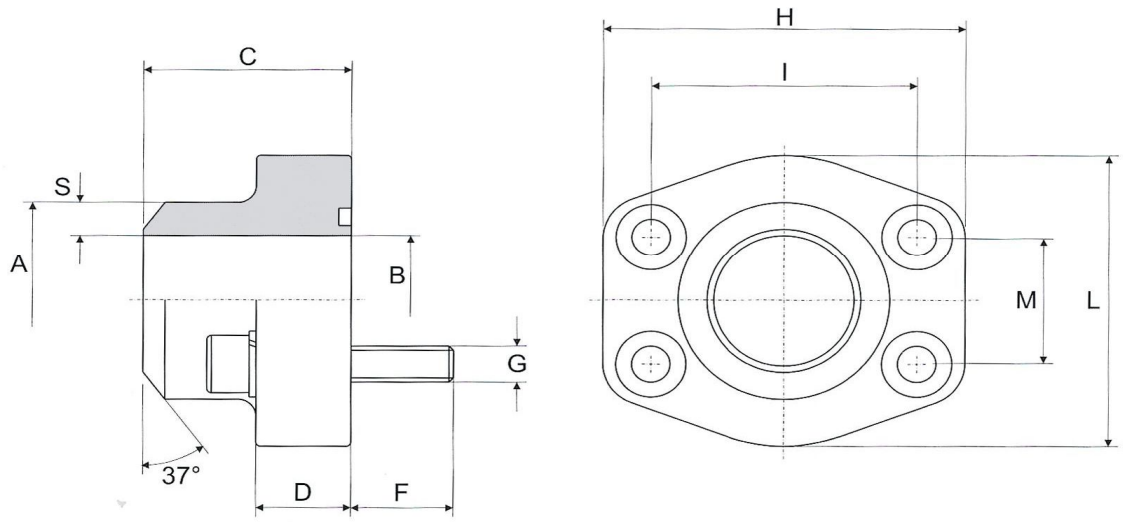

SERIE 3000 psi

CODICE	BAR	A	S.A.E	B	C	D	S	F	G Viti / Bolts Metr.	UNC	H	I	L	M	O-RING
CFS080ST	348	21.6	1/2"	13	36	16	4.3	14	M 8	5/16"	57	38	47	17.5	4075
CFS100ST	348	27.2	3/4"	19	36	18	4.1	16	M10	3/8"	66	47.6	49	22.2	4100
CFS102ST	348	34.5	1"	25	38	18	4.7	16	M10	3/8"	71	52.4	53	26.2	4131
CFS104ST	278	42.8	1"1/4	31	41	21	6	18	M10	7/16"	80	58.7	69	30.2	4150
CFS106ST	210	48.6	1"1/2	38	44	25	5.3	18	M12	1/2"	94	69.85	77	35.7	4187
CFS108ST	210	61	2"	50	45	25	5.5	18	M12	1/2"	103	77.8	89	42.9	4225
CFS110ST	175	76.6	2"1/2	63	50	25	6.8	18	M12	1/2"	115	89	101	50.8	4275
CFS112ST	138	89	3"	73	50	27	8	25	M16	5/8"	135	106.4	124	62	4337
CFS114ST	35	103	3"1/2	89	50	27	7	25	M16	5/8"	153	120.7	137	70	4387
CFS116ST	35	115	4"	99	50	27	8	25	M16	5/8"	163	130	147	77.8	4437
CFS118ST	35	141	5"	120	50	28	10.5	25	M16	5/8"	184	152.4	180	92	4537

SERIE 6000 psi

CODICE	BAR	A	S.A.E	B	C	D	S	F	G Viti / Bolts Metr.	UNC	H	I	L	M	O-RING
CFS401ST	420	17.5	3/8"	10	36	18	3.7	14	M 8	5/16"	57	40.5	47	18.3	4075
CFS401ST	420	21.6	1/2"	13	36	18	4.3	14	M 8	5/16"	57	40.5	47	18.3	4075
CFS402ST	420	27.2	3/4"	18	36	18	4.6	16	M10	3/8"	71	50.8	53	23.8	4100
CFS403ST	420	34.1	1"	22	44	24	6.3	19	M12	7/16"	80	57.1	66	27.8	4131
CFS404ST	420	42.8	1"1/4	28	44	25	7.4	22	M14	1/2"	94	66.7	77	31.6	4150
CFS405ST	420	48.6	1"1/2	32	51	29	8.3	24	M16	5/8"	106	79.4	89	36.5	4187
CFS406ST	420	61	2"	41	70	35	10	32	M20	3/4"	135	96.8	116	44.4	4225
CFS408ST	420	76.6	2"1/2	50	75	45	13	40	M24		166	123.8	150	58.7	4275
CFS410ST	420	90	3"	58	90	55	16	55	M30		208	152.4	178	71.4	4337

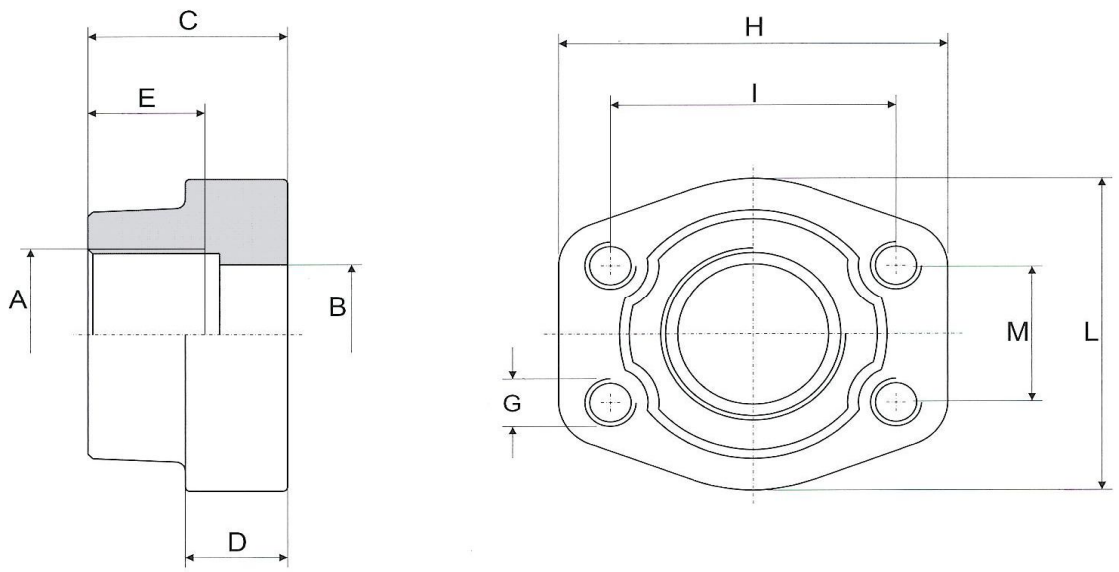

SERIE 3000 psi

CODICE	BAR	A S.A.E	B	C	D	E	G Metr.	G UNC	H	I	L	M
C080GFF	348	3/8"	13	36	16	19	M 8	5/16"	57	38	47	17.5
C080GFF	348	1/2"	13	36	16	19	M 8	5/16"	57	38	47	17.5
C100GFF	348	3/4"	19	36	18	19	M 10	3/8"	66	47.6	49	22.2
C102GFF	348	1"	25	38	18	19	M 10	3/8"	71	52.4	53	26.2
C104GFF	278	1"1/4	31	41	21	22	M 10	7/16"	80	58.7	69	30.2
C106GFF	210	1"1/2	38	44	25	24	M 12	1/2"	94	69.85	77	35.7
C108GFF	210	2"	50	45	25	26	M 12	1/2"	103	77.8	89	42.9
C110GFF	175	2"1/2	63	50	25	30	M 12	1/2"	115	89	101	50.8
C112GFF	138	3"	73	50	27	34	M 16	5/8"	135	106.4	124	62
C114GFF	35	3"1/2	89	50	27	27	M 16	5/8"	152	120.7	136	70
C116GFF	35	4"	99	50	27	30	M 16	5/8"	162	130	146	77.8
C118GFF	35	5"	120	50	28	30	M 16	5/8"	184	152.4	180	92

SERIE 6000 psi

CODICE	BAR	A S.A.E	B	C	D	E	G Viti / Bolts Metr.	G Viti / Bolts UNC	H	I	L	M
C401GFF	420	3/8"	13	36	16	19	M 8	5/16"	57	40.5	47	18.3
C401GFF	420	1/2"	13	36	16	19	M 8	5/16"	57	40.5	47	18.3
C402GFF	420	3/4"	19	36	19	22	M 10	3/8"	71	50.8	53	23.8
C403GFF	420	1"	25	44	24	24	M 12	7/16"	80	57.1	69	27.8
C404GFF	420	1"1/4	31	44	27	25	M 14	1/2"	94	66.7	77	31.6
C405GFF	420	1"1/2	38	51	30	28	M 16	5/8"	106	79.4	89	36.5
C406GFF	420	2"	50	70	37	33	M 20	3/4"	135	96.8	116	44.4
C408GFF	420	2"1/2	63	75	45	35	M 24		166	123.8	150	58.7
C410GFF	420	3"	73	90	55	40	M30		208	152.4	178	71.4

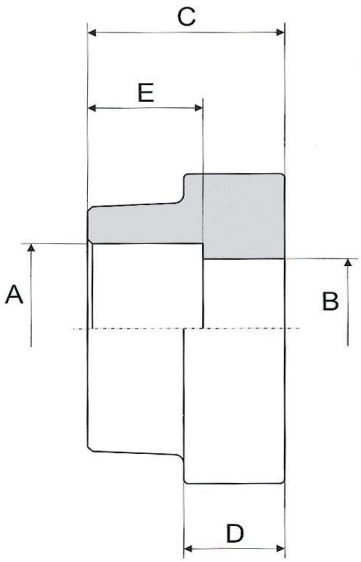

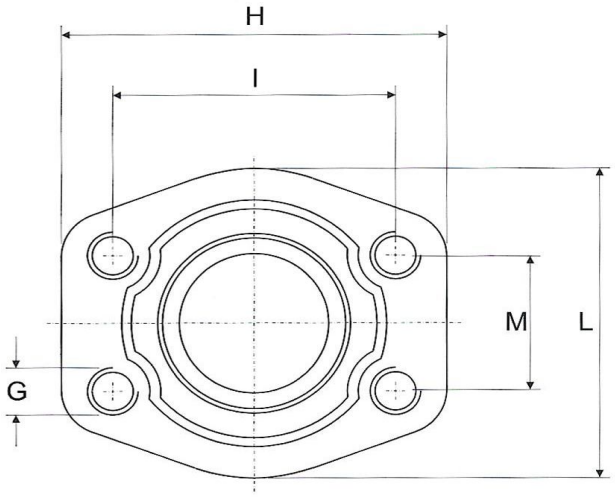

SERIE 3000 psi

CODICE	BAR	A	S.A.E	B	C	D	E	G Metr.	G UNC	H	I	L	M
C080SFF	348	17.5	3/8"	13	36	16	18	M 8	5/16"	57	38	47	17.5
C080SFF	348	21.6	1/2"	13	36	16	18	M 8	5/16"	57	38	47	17.5
C100SFF	348	27.2	3/4"	19	36	18	18	M10	3/8"	66	47.6	49	22.2
C102SFF	348	34.1	1"	25	38	18	18	M10	3/8"	70	52.4	53	26.2
C104SFF	278	42.8	1"1/4	31	41	21	20	M10	7/16"	80	58.7	69	30.2
C106SFF	210	48.6	1"1/2	38	44	25	22	M12	1/2"	94	69.85	77	35.7
C108SFF	210	61	2"	50	45	25	24	M12	1/2"	103	77.8	89	42.9
C110SFF	175	76.6	2"1/2	63	50	25	28	M12	1/2"	115	89	101	50.8
C112SFF	138	90.5	3"	73	50	27	28	M16	5/8"	135	106.4	124	62
C114SFF	35	103	3"1/2	89	50	27	28	M16	5/8"	153	120.7	137	70
C116SFF	35	115	4"	99	50	27	28	M16	5/8"	163	130	147	77.8
C118SFF	35	142	5"	120	50	28	28	M16	5/8"	184	152.4	180	92

SERIE 6000 psi

CODICE	BAR	A	S.A.E	B	C	D	E	G Metr.	G UNC	H	I	L	M
C401SFF	420	17.5	3/8"	13	36	16	18	M 8	5/16"	57	40.5	47	18.3
C401SFF	420	21.6	1/2"	13	36	16	18	M 8	5/16"	57	40.5	47	18.3
C402SFF	420	27.2	3/4"	19	36	19	20	M10	3/8"	71	50.8	53	23.8
C403SFF	420	34.1	1"	25	44	24	22	M12	7/16"	80	57.1	66	27.8
C404SFF	420	42.8	1"1/4	31	44	27	22	M14	1/2"	94	66.7	77	31.6
C405SFF	420	48.6	1"1/2	38	51	30	24	M16	5/8"	106	79.4	89	36.5
C406SFF	420	61	2"	50	70	37	25	M20	3/4"	135	96.8	116	44.4
C408SFF	420	76.6	2"1/2	63	75	45	28	M24		166	123.8	150	58.7
C410SFF	420	90.5	3"	73	90	55	30	M30		208	152.4	178	71.4

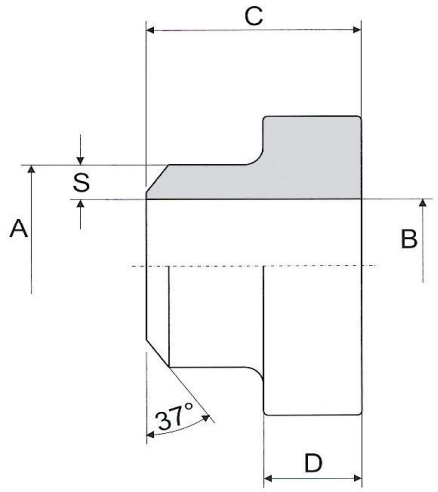

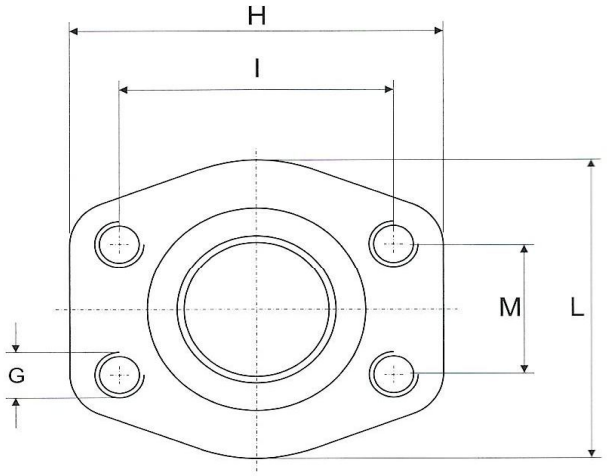

SERIE 3000 psi

CODICE	BAR	A	S.A.E	B	C	D	S	G Metr.	G UNC	H	I	L	M
C080STFF	348	21.6	1/2"	13	36	16	4.3	M 8	5/16"	57	38	47	17.5
C100STFF	348	27.2	3/4"	19	36	18	4.1	M10	3/8"	66	47.6	49	22.2
C102STFF	348	34.5	1"	25	38	18	4.7	M10	3/8"	71	52.4	53	26.2
C104STFF	278	42.8	1"1/4	31	41	21	6	M10	7/16"	80	58.7	69	30.2
C106STFF	210	48.6	1"1/2	38	44	25	5.3	M12	1/2"	94	69.85	77	35.7
C108STFF	210	61	2"	50	45	25	5.5	M12	1/2"	103	77.8	89	42.9
C110STFF	175	76.6	2"1/2	63	50	25	6.8	M12	1/2"	115	89	101	50.8
C112STFF	138	89	3"	73	50	27	8	M16	5/8"	135	106.4	124	62
C114STFF	35	103	3"1/2	89	50	27	7	M16	5/8"	153	120.7	137	70
C116STFF	35	115	4"	99	50	27	8	M16	5/8"	163	130	147	77.8
C118STFF	35	142	5"	120	50	28	10.5	M16	5/8"	184	152.4	180	92

SERIE 6000 psi

CODICE	BAR	A	S.A.E	B	C	D	S	G Metr.	G UNC	H	I	L	M
C401SFF	420	17.5	3/8"	10	36	16	3.7	M 8	5/16"	57	40.5	47	18.3
C401SFF	420	21.6	1/2"	13	36	16	4.3	M 8	5/16"	57	40.5	47	18.3
C402SFF	420	27.2	3/4"	18	36	19	4.6	M10	3/8"	71	50.8	53	23.8
C403SFF	420	34.5	1"	22	44	24	6.3	M12	7/16"	80	57.1	66	27.8
C404SFF	420	42.8	1"1/4	28	44	27	7.4	M14	1/2"	94	66.7	77	31.6
C405SFF	420	48.6	1"1/2	32	51	30	8.3	M16	5/8"	106	79.4	89	36.5
C406SFF	420	61	2"	41	70	37	10	M20	3/4"	135	96.8	116	44.4
C408SFF	420	76.6	2"1/2	50	75	45	13	M24		166	123.8	150	58.7
C410SFF	420	90	3"	58	90	55	16	M30		208	152.4	178	71.4

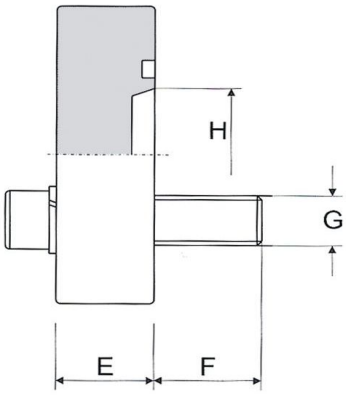

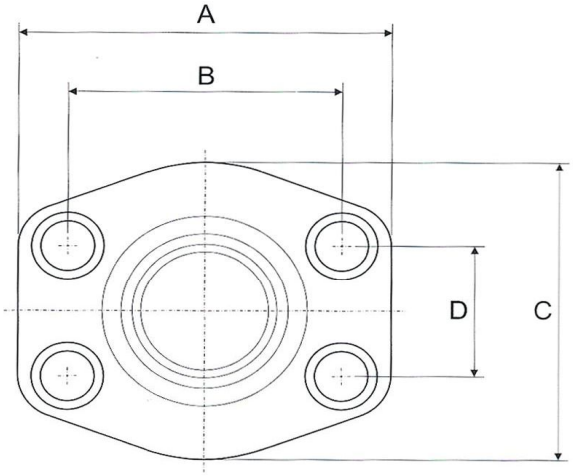

SERIE 3000 psi

CODICE	BAR	A	S.A.E	B	C	D	E	F	G Viti / Bolts Metr.	UNC	H	O-RING
CFCS080	348	57	1/2"	38	47	17.5	16	14	M 8	5/16"	10	4075
CFCS100	348	66	3/4"	47.6	49	22.2	18	16	M10	3/8"	15	4100
CFCS102	348	71	1"	52.4	53	26.2	19	16	M10	3/8"	18	4131
CFCS104	278	80	1"1/4	58.7	69	30.2	21	18	M10	7/16"	23	4150
CFCS106	210	95	1"1/2	69.85	77	35.7	24	19	M12	1/2"	28	4187
CFCS108	210	103	2"	77.8	89	42.9	24	19	M12	1/2"	45	4225
CFCS110	175	116	2"1/2	89	101	50.8	25	19	M12	1/2"	58	4275
CFCS112	138	136	3"	106.4	124	62	25	27	M16	5/8"	70	4337
CFCS114	35	152	3"1/2	120.7	136	70	25	27	M16	5/8"	85	4387
CFCS116	35	162	4"	130	146	77.8	25	27	M16	5/8"	95	4437
CFCS118	35	184	5"	152.4	180	92	25	27	M16	5/8"	110	4537

SERIE 6000 psi

CODICE	BAR	A	S.A.E	B	C	D	E	F	G Viti / Bolts Metr.	UNC	H	O-RING
CFCS401	420	57	3/8"	40.5	47	18.3	16	14	M 8	5/16"	10	4075
CFCS402	420	71	3/4"	50.8	53	23.8	19	16	M10	3/8"	15	4100
CFCS403	420	80	1"	57.1	66	27.8	24	18	M12	7/16"	22	4131
CFCS404	420	94	1"1/4	66.7	77	31.6	27	24	M14	1/2"	30	4150
CFCS405	420	103	1"1/2	79.4	89	36.5	30	24	M16	5/8"	35	4187
CFCS406	420	135	2"	96.8	123	44.4	35	31	M20	3/4"	48	4225
CFCS408	420	166	2"1/2	123.8	150	58.7	45	40	M24		55	4275
CFCS410	420	208	3"	152.4	178	71.4	55	45	M30		65	4337

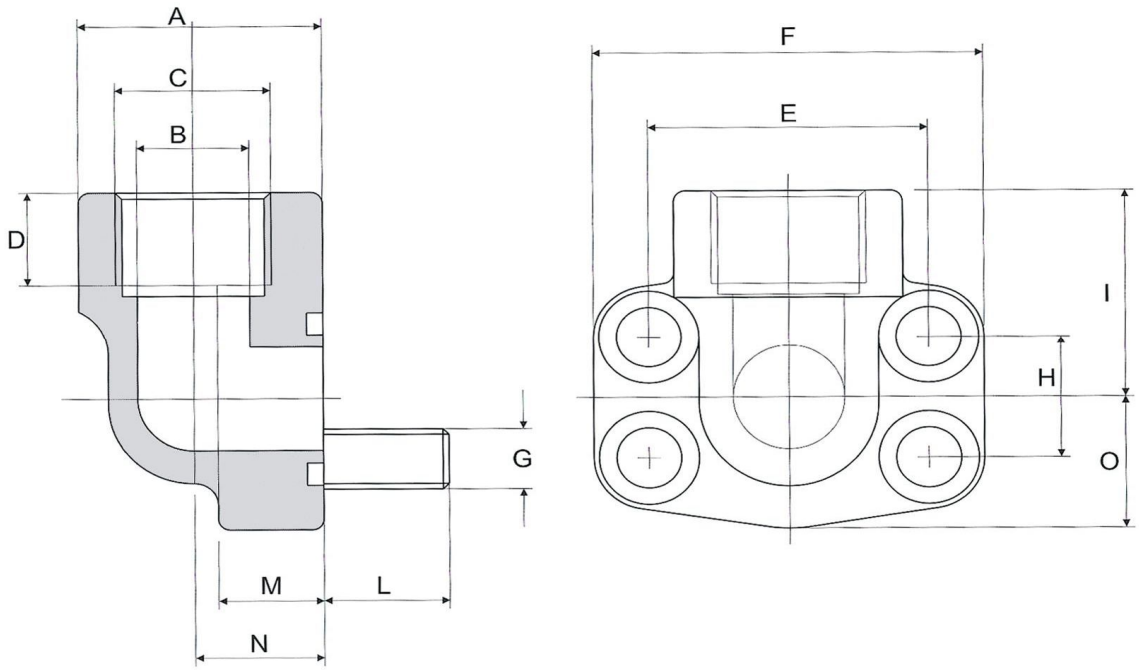

SERIE 3000 psi

CODICE	BAR	C S.A.E	A	B	D	E	F	G Viti / Metr.	Bolts UNC	H	I	O	M	N	L	O-RING
FS280/90G	348	1/2"	34	13	19	38	57	M 8	5/16"	17.5	36	23	17	18	13	4075
FS300/90G	348	3/4"	38.5	19	19	47.6	68	M 10	3/8"	22.2	38	25	18	22	15	4100
FS302/90G	348	1"	44.5	25	19	52.4	74	M 10	3/8"	26.2	41	27	19	28	15	4131
FS304/90G	278	1"1/4	53.5	31	22	58.7	81	M 10	7/16"	30.2	50	34	22	30	17	4150
FS306/90G	210	1"1/2	62.5	38	24	69.85	95	M 12	1/2"	35.7	58	39	25	36	18	4187
FS308/90G	210	2"	77	50	26	77.8	105	M 12	1/2"	42.9	65	44	25	41	18	4225
FS310/90G	175	2"1/2	89	60	30	88.9	115	M 12	1/2"	50.8	77	50	25	50	18	4275

SERIE 6000 psi

CODICE	BAR	C S.A.E	A	B	D	E	F	G Viti / Metr.	Bolts UNC	H	I	O	M	N	L	O-RING
FS580/90G	420	1/2"	34	13	19	40.5	57	M 8	5/16"	18.3	36	23	17	18	13	4075
FS600/90G	420	3/4"	44.5	19	22	50.8	72	M10	3/8"	23.8	41	27	20	28	15	4100
FS602/90G	420	1"	53.5	25	24	57.1	82	M12	7/16"	27.8	50	34	24	30	19	4131
FS604/90G	420	1"1/4	62.5	31	25	66.7	95	M14	1/2"	31.6	58	39	25	36	21	4150
FS606/90G	420	1"1/2	77	38	28	79.4	110	M16	5/8"	36.5	65	44	26	41	25	4187
FS608/90G	420	2"	87	50	34	96.8	134	M20	3/4"	44.4	75	58	35	45	32	4225

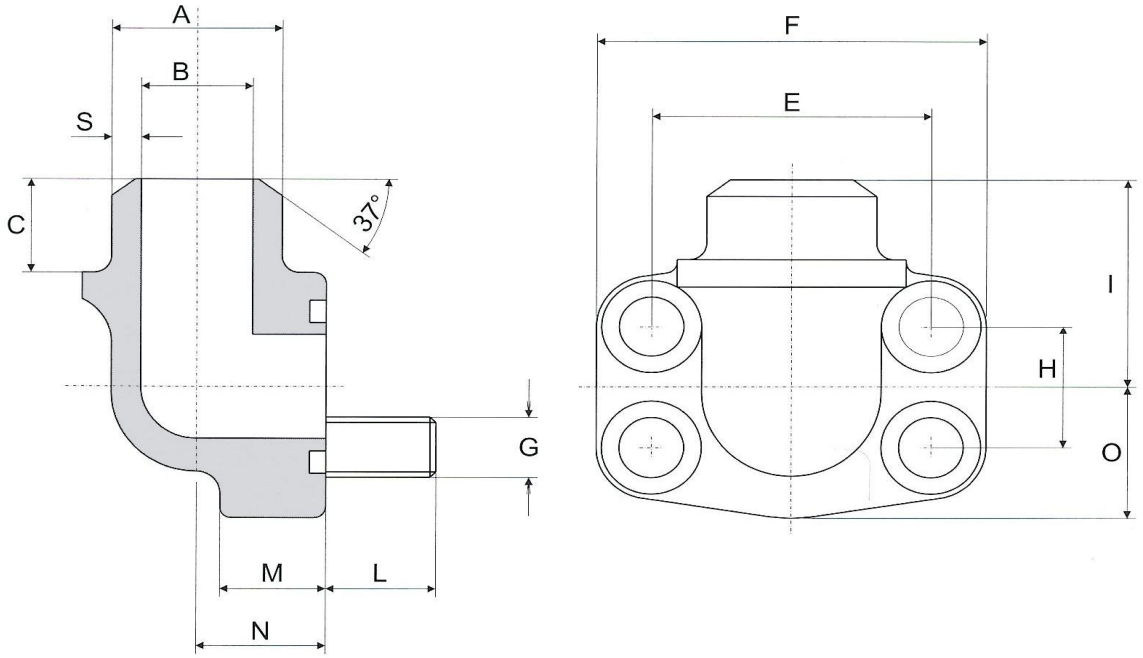

SERIE 3000 psi

CODICE	BAR	S.A.E	A	B	C	S	E	F	G Viti / Metr.	Bolts UNC	H	I	O	M	N	L	O-RING
FS280/90ST	348	1/2"	21.6	13	12	4.3	38	57	M 8	5/16"	17.5	40	23	17	18	13	4075
FS300/90ST	348	3/4"	27.2	19	12	4.1	47.6	68	M 8	3/8"	22.2	41	25	18	22	15	4100
FS302/90ST	348	1"	34.5	25	13	4.7	52.4	74	M10	3/8"	26.2	50	27	19	28	15	4131
FS304/90ST	278	1"1/4	42.8	31	13	6	58.7	81	M10	7/16"	30.2	57	34	22	30	17	4150
FS306/90ST	210	1"1/2	48.6	38	14	5.3	69.85	95	M10	1/2"	35.7	66	39	25	36	18	4187
FS308/90ST	210	2"	61	50	15	5.5	77.8	105	M12	1/2"	42.9	66	44	25	41	18	4225
FS310/90ST	175	2"1/2	76.6	60	25	8	88.9	115	M12	1/2"	50.8	77	50	25	50	18	4275

SERIE 6000 psi

CODICE	BAR	C S.A.E	A	B	C	S	E	F	G Viti / Metr.	Bolts UNC	H	I	O	M	N	L	O-RING
FS580/90ST	420	1/2"	21.6	13	12	4.3	40.5	57	M 8	5/16"	18.3	36	23	17	18	13	4075
FS600/90ST	420	3/4"	27.2	18	12	4.6	50.8	72	M10	3/8"	23.8	41	27	20	28	15	4100
FS602/90ST	420	1"	34.5	22	13	6.3	57.1	82	M12	7/16"	27.8	50	34	24	30	19	4131
FS604/90ST	420	1"1/4	42.8	28	13	7.4	66.7	95	M14	1/2"	31.6	58	39	25	36	21	4150
FS606/90ST	420	1"1/2	48.6	32	15	8.3	79.4	110	M16	5/8"	36.5	65	44	26	41	25	4187
FS608/90ST	420	2"	61	41	15	10	96.8	134	M20	3/4"	44.4	75	58	35	45	32	4225

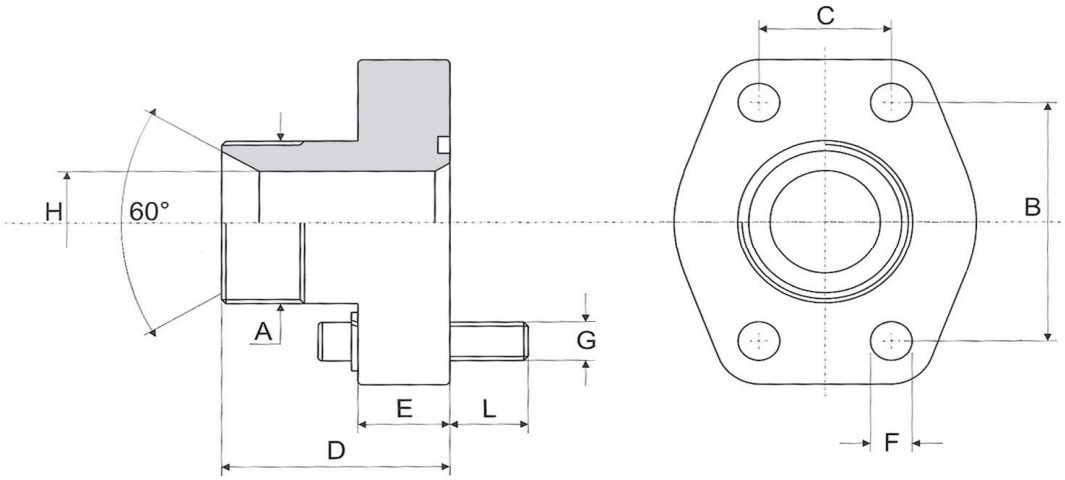

SERIE 3000 psi

CODICE	BAR	A	S.A.E	B	C	D	E	F	G Metr.	G UNC	H	L	O-RING
FGE080A FGE080B FGE080C	348	3/8" 1/2" 3/4"	1/2"	38	17.5	37 39 42	16	9	M8	5/16"	10 12 13	14	4075
FGE100A FGE100B FGE100C	348	1/2" 3/4" 1"	3/4"	47.6	22.2	42 45 47	18	11	M10	3/8"	12 17 19	14	4100
FGE102A FGE102B FGE102C	348	3/4" 1" 1"1/4"	1"	52.4	26.2	47 49 49	18	11	M10	3/8"	17 22 25	14	4131
FGE104A FGE104B FGE104C	278	1" 1"1/4 1"1/2	1"1/4	58.7	30.2	53 53 55	21	11.5	M10	7/16"	22 27 31	18	4150
FGE106A FGE106B FGE106C	210	1"1/4 1"1/2 2"	1"1/2	69.85	35.7	59 61 63	24	13.5	M12	1/2"	27 34 38	18	4187
FGE108A FGE108B	210	1"1/2 2"	2"	77.8	42.9	69	25	103	M12	1/2"	34 42	19	4225

SERIE 6000 psi

CODICE	BAR	A	S.A.E	B	C	D	E	F	G Metr.	G UNC	H	L	O-RING
FGE401A FGE401B FGE401C	420	3/8" 1/2" 3/4"	1/2"	40.5	18.2	38 40 43	16	9	M8	5/16"	10 12 13	14	4075
FGE402A FGE402B FGE402C	420	1/2" 3/4" 1"	3/4"	50.8	23.8	44 47 49	18	11	M10	3/8"	12 17 19	14	4100
FGE403A FGE403B FGE403C	420	3/4" 1" 1"1/4"	1"	57.1	27.8	54 56 56	21	13	M12	7/16"	17 22 25	18	4131
FGE404A FGE404B FGE404C	420	1" 1"1/4 1"1/2	1"1/4	66.7	31.6	61 61 63	24	15	M14	1/2"	22 27 31	18	4150
FGE405A FGE405B	420	1"1/4 1"1/2	1"1/2	79.4	36.5	65 67	27	17	M16	5/8"	27 32	20	4187

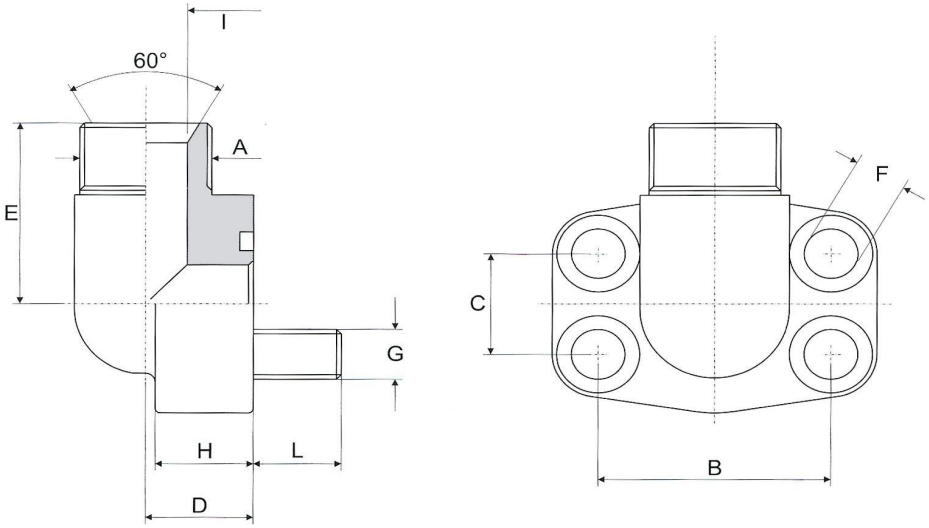

SERIE 3000 psi

CODICE	BAR	A	S.A.E	B	C	D	E	F	G Viti / Bolts Metr.	UNC	H	I	L	O-RING
FGE300/90A FGE300/90B FGE300/90C	348	3/8" 1/2" 3/4"	1/2"	38	17.5	17 17 20	37 39 40	9	M8	5/16"	16	10 12 13	14	4075
FGE301/90A FGE301/90B FGE301/90C	348	1/2" 3/4" 1"	3/4"	47.6	22.2	20 20 25	41 44 45	11	M10	3/8"	18	12 17 19	14	4100
FGE302/90A FGE302/90B FGE302/90C	348	3/4" 1" 1"1/4"	1"	52.4	26.2	20 25 31	47 48 49	11	M10	3/8"	19	17 22 25	14	4131
FGE304/90A FGE304/90B FGE304/90C	278	1" 1"1/4 1"1/2	1"1/4	58.7	30.2	25 31 37	54 55 56	11.5	M10	7/16"	22	22 27 31	18	4150
FGE306/90A FGE306/90B	210	1"1/4 1"1/2	1"1/2	69.85	35.7	31 37	59 61	13.5	M12	1/2"	25	27 34	18	4187

SERIE 6000 psi

CODICE	BAR	A	S.A.E	B	C	D	E	F	G Metr.	UNC	H	I	L	O-RING
FGE600/90A FGE600/90B FGE600/90C	420	3/8" 1/2" 3/4"	1/2"	40.5	18.2	17 17 20	37 39 40	9	M8	5/16"	16	10 12 13	14	4075
FGE601/90A FGE601/90B FGE601/90C	420	1/2" 3/4" 1"	3/4"	50.8	23.8	20 20 25	45 48 50	11	M10	3/8"	19	12 17 19	14	4100
FGE602/90A FGE602/90B FGE602/90C	420	3/4" 1" 1"1/4"	1"	57.1	27.8	20 25 31	52 54 55	13	M12	7/16"	24	17 22 25	18	4131
FGE604/90A FGE604/90B FGE604/90C	420	1" 1"1/4 1"1/2	1"1/4	66.7	31.6	31 31 37	59 59 61	15	M14	1/2"	25	22 27 31	18	4150
FGE606/90A FGE606/90B	420	1"1/4 1"1/2	1"1/2	79.4	36.5	37 37	64 66	17	M16	5/8"	26	27 32	20	4187

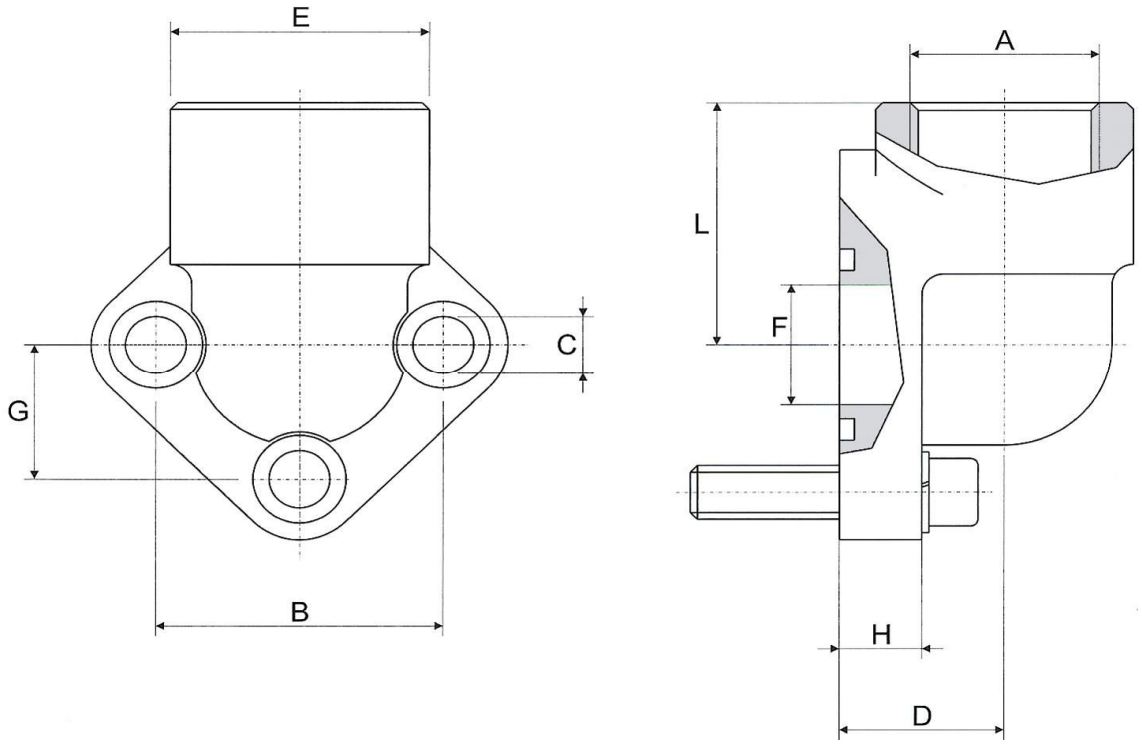

CODICE	GRUPPO POMPA	B	G	C	E	A	L	F	H	D	N. Fori	Viti	O-RING
RG	0.5	26	13	5.5	30	3/8" 1/2"	31	11	9	17	3	M 5X18	2056
RG	1	30	15	6.5	30	3/8" 1/2"	31	12	9	17	3	M 6X20	121
RG	2	40	20	8.5	36	1/2" 3/4"	36	19	11.5	23	3	M 8X25	132
RG	3	51	25.5	10.5	45	3/4" 1"	46	24	13	26	3	M 10X30	4118
RG	3	56	28	10.5	45	3/4" 1"	46	24	13	26	3	M 10X30	4118
RG	3.5	62	31	11	55	1"1/4 1"	55	31 25	14	35	3	M 10X30	4150
RG	3.5	62	31	13	55	1"1/4 1"	55	31 25	14	35	3	M 12X35	4150
RG	4	72.5	36.2	13	62	1"1/2 1"1/4	58	38 31	15	38	3	M 12X35	4187

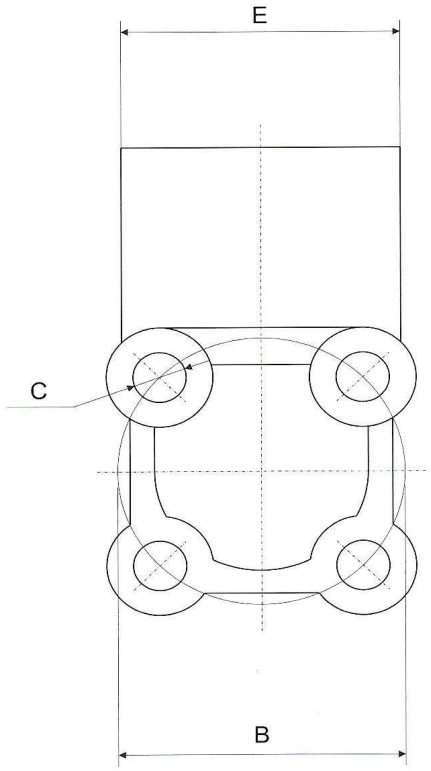

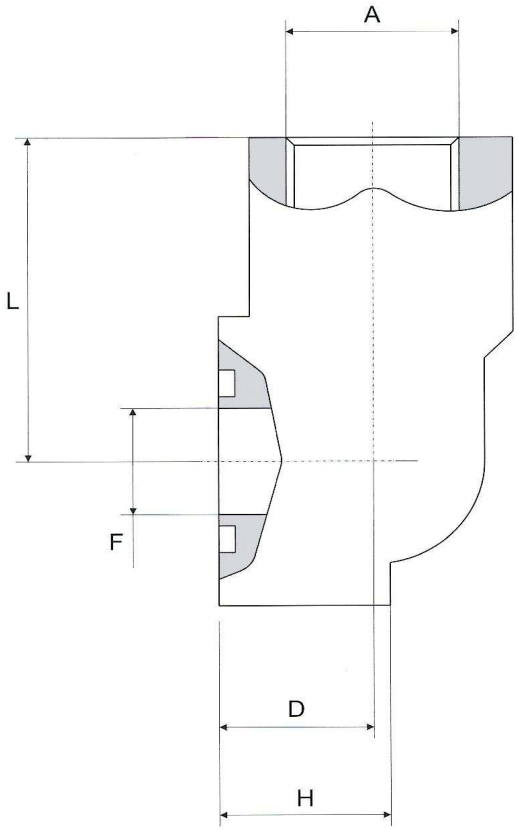

CODICE	BAR	A BSP	B	C	D	E	F	H	L	N. FORI	H	O-RING
BKA 3/8/30 BKA 1/2/30	180	3/8" 1/2"	30	6,5	18	33	11,5	20	39	4	M 6X30 - M 6X40 M 6X30 - M 6X40	121 121
BKA 1/2/35 BKA 3/8/35	180	3/8" 1/2"	35	6,5	18	34	14	20	42,5	4	M 6X30 - M 6X40 M 6X30 - M 6X40	3075 3075
BKA 1/2/40 BKA 3/4/40	180	1/2" 3/4"	40	6,5	24	41	18	28	47,5	4	M 6X40 - M 6X50 M 6X40 - M 6X50	130 130
BKA 3/4/55 BKA 1/55	180	3/4" 1"	55	8,5	29	49	24,5	31	54	4	M 8X45 - M 8X60 M 8X45 - M 8X60	4118 4118

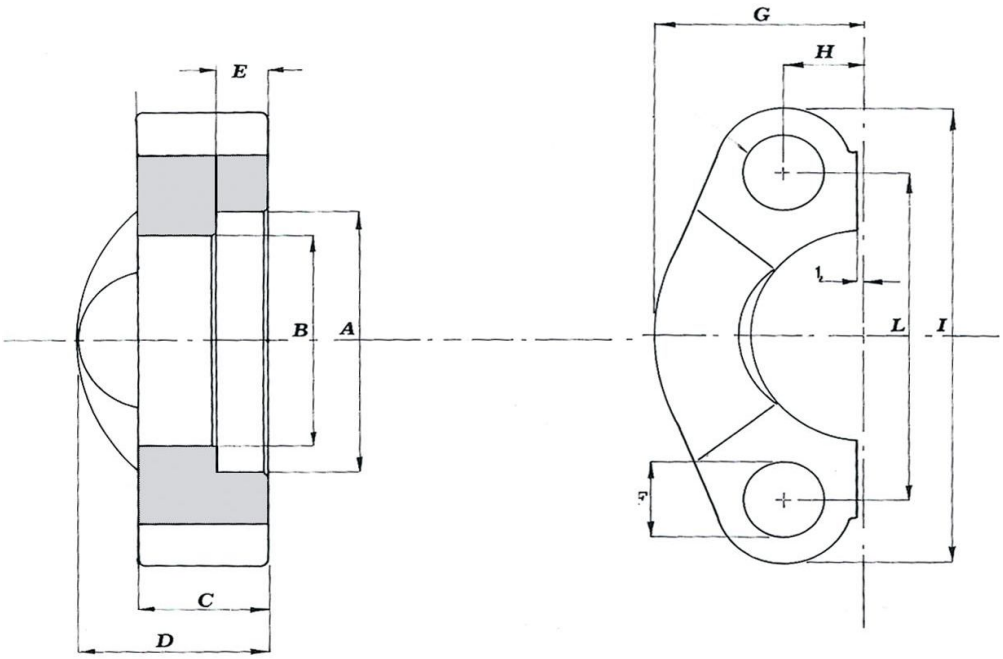

SERIE 3000 psi

CODICE	BAR	S.A.E	A	B	C	D	E	F	G	H	I	L
13SL08	210	1/2"	31	24,3	13	20	6,2	8,75	23	8,7	54	38,1
13SL12	210	3/4"	38.9	32,1	14	22	6,2	10,5	26	11,1	65	47,6
13SL16	210	1"	45.2	38,5	16	22	7,5	10,5	29,2	13,1	70	52,4
13SL20	210	1"1/4	51.6	43,7	14	22	7,5	12	36,3	15,1	80	58,7
13SL24	210	1"1/2	61.1	50,8	16	24	7,5	13,5	41,1	17,9	94	69,9
13SL32	210	2"	72.2	62,7	16	26	9	13,5	48,2	21,4	102	77,8
13SL40	175	2"1/2	84.9	74,9	19	38	9	13,5	54	25,4	115	88,9
13SL48	138	3"	102.4	90,9	22	40	9	17	65,3	31	135	106,4
13SL56	35	3"1/2	115	102,36	23	45	10,7	17	70	34,85	152	120,65
13SL64	35	4"	127.8	115,11	25	48	10,7	17	75	38,9	160	130,18

SERIE 6000 psi

CODICE	BAR	S.A.E	A	B	C	D	E	F	G	H	I	L
13SP08	420	1/2"	32.5	24.6	16	22	7,2	8.75	24	9.1	57	40.5
13SP12	420	3/4"	42	32.5	19	28	8,3	10.5	30	11.9	72	50.8
13SP16	420	1"	48.4	38.9	24	32	9	13	35	13.9	81	57.2
13SP20	420	1"1/4	54.8	44.5	27	38	9,8	15	39	15.9	96	66.7
13SP24	420	1"1/2	64.3	51.6	30	42	12,1	17	48	18.3	113	79.4
13SP32	420	2	80.2	67.6	37	52	12,1	21	57	22.2	134	96.8
13SP40	420	2"1/2	108.5	89.5	48	48	20	25	75	29.35	175	123.8
13SP48	420	3"	132.5	114.5	58	58	25	32	89	35.7	210	152.4

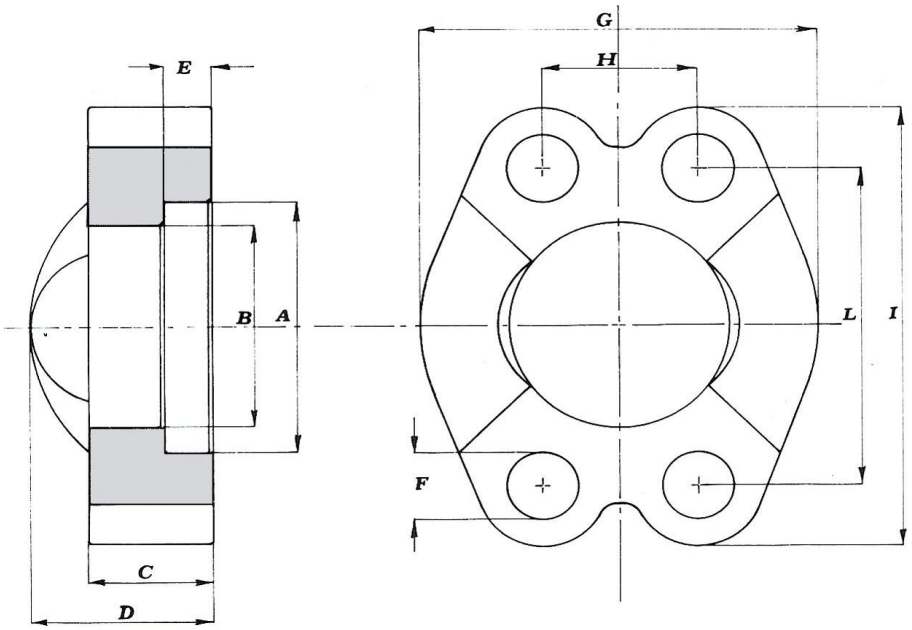

SERIE 3000 psi

CODICE	BAR	S.A.E	A	B	C	D	E	F	G	H	I	L
SI3001	210	1/2"	31	24.3	13	20	6,2	8,75	46	17,4	54	38,1
SI3002	210	3/4"	38.9	32.1	14	22	6,2	10,5	52	22,2	65	47,6
SI3003	210	1"	45.2	38.5	16	22	7,5	10,5	59	26,2	70	52,4
SI3004A SI3004 SI3004B	210	1"1/4	51.6	43.7	14	22	7,5	10,5 12 12,5	73	30,2	80	58,7
SI3005 SI3005B	210	1"1/2	61.1	50.8	16	24	7,5	13,5 14,5	83	35,8	94	69,9
SI3006 SI3006B	210	2"	72.2	62.7	16	26	9	13,5 14,5	97	42,8	102	77,8
SI3007 SI3007B	175	2"1/2	84.9	74.9	19	38	9	13,5 14,5	109	50,8	115	88,9
SI3008	138	3"	102.4	90.9	22	40	9	17	131	62	135	106,4
SI3009	35	3"1/2	115	102,36	23	45	10,7	17	140	69,86	152	120,65
SI3010	35	4"	127.8	115.1	25	48	10,7	17	150	77,8	160	130,18
SI3011	35	5"	153.2	140,5	28	50	10,7	17	180	92	183	152,4

SERIE 6000 psi

CODICE	BAR	S.A.E	A	B	C	D	E	F	G	H	I	L
SI6001	420	1/2"	32.5	24.6	16	22	7,2	8.75	48	18.2	57	40.5
SI6002	420	3/4"	42	32.5	19	28	8,3	10.5	60	23.8	72	50.8
SI6003	420	1"	48.4	38.9	24	32	9	13	70	27.8	81	57.2
SI6004	420	1"1/4	54.8	44.5	27	38	9,8	15	78	31.8	96	66.7
SI6005	420	1"1/2	64.3	51.6	30	42	12,1	17	96	36.6	113	79.4
SI6006	420	2	80.2	67.6	37	52	12,1	21	114	44.4	134	96.8
SI6008	420	2"1/2	108.5	89.5	48	48	20	25	150	58.7	175	123.8
SI6010	420	3"	132.5	114.5	58	58	25	32	178	71.4	210	152.4

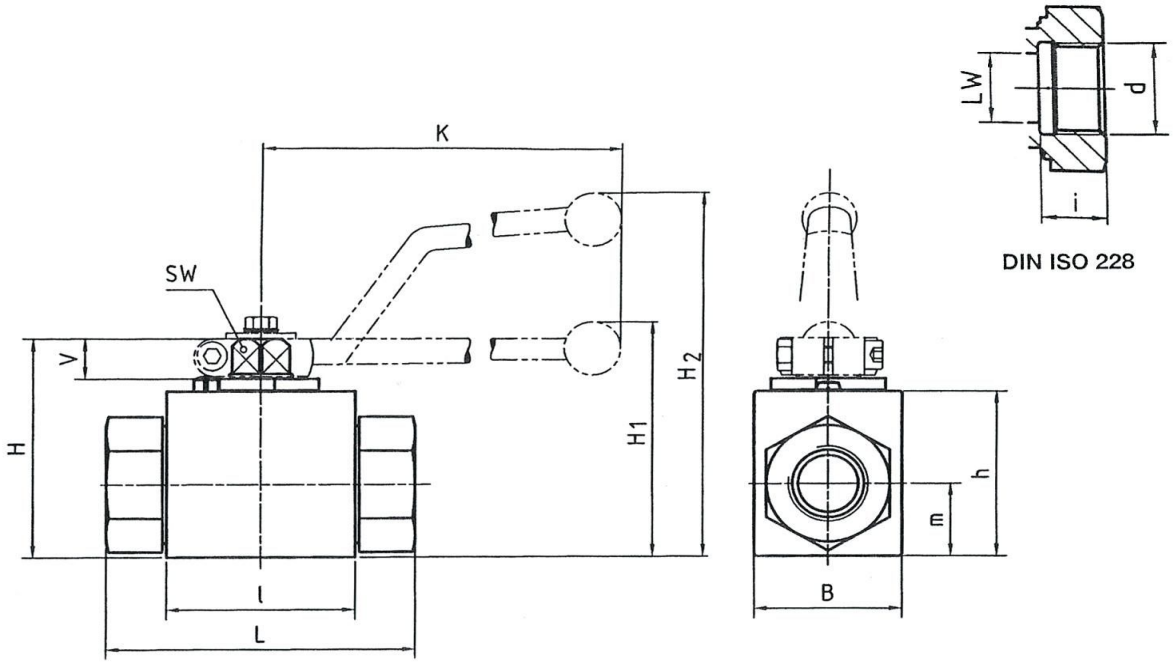

CODICE	DN	LW	L	l	B	H	h	m	V	SW	K	i	d	H1	H2
BKHR 1/8	4	5	69	40	26	47	33	13.5	11	9	9	10	G1/8		82
BKHR 1/4	6	6	69	40	26	47	33	13.5	11	9	9	14	G1/4		82
BKHR 3/8	10	10	72	43	32	52	38	17.5	11	9	9	14	G3/8		86
BKHR 1/2	13	13	83	48	35	54	40	19	11	9	9	16.3	G1/2		89
BKHR 1/2	16	15	83	48	38	63	46	19	13	12	12	16.3	G1/2		106
BKHR 5/8	13	13	83	48	35	54	40	19	11	9	9	16	G5/8		89
BKHR 5/8	16	15	83	48	38	63	46	19	13	12	12	16	G5/8		106
BKHR 3/4	20	20	95	62	49	75	57	24.5	14	14	14	18	G3/4	79	
BKHR 1	25	25	113	66	58	83	65	29.5	14	14	14	20	G1	87	
BKHR 1/4	25/32	25	120	66	58	83	65	29.5	14	14	14	22	G1 1/4	87	
BKHR 1/2	25/40	25	130	66	58	83	65	29.5	14	14	14	24	G1 1/2	87	

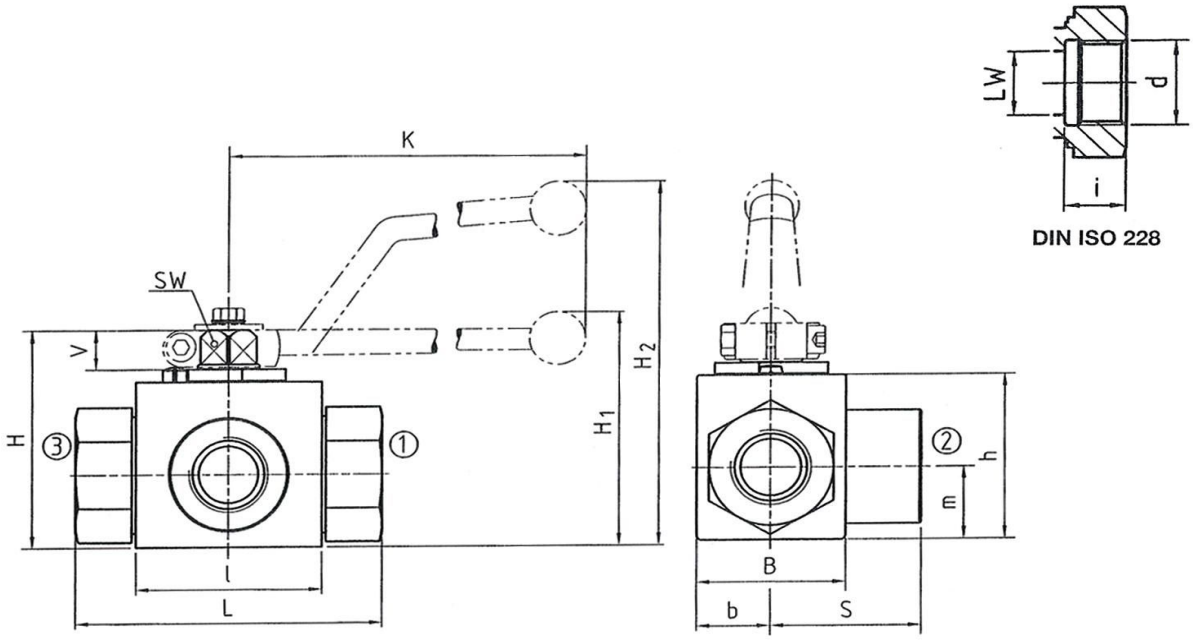

CODICE	DN	LW	L	l	b	B	H	h	m	S	V	SW	K	i	d	H1	H2
BK3 1/8	4	5	69	40	13	29	47	33	13.5	34.5	11	9	115	10	G1/8		82
BK3 1/4	6	6	69	40	13	29	47	33	13.5	34.5	11	9	115	14	G1/4		82
BK3 3/8	10	10	72	43	16	35	52	38	17.5	36	11	9	115	14	G3/8		86
BK3 1/2	13	13	83	48	17.5	38	54	40	19	41.5	11	9	115	16.3	G1/2		89
BK3 5/8	13	13	83	48	17.5	38	54	40	19	41.5	11	9	115	16	G5/8		89
BK3 3/4	20	20	95	62	24.5	52	75	57	24.5	47.5	14	14	200	18	G3/4	79	
BK3 1	25	25	113	66	29	61	83	65	29.5	56.5	14	14	200	20	G1	87	
BK3 1/4	25/32	25	120	66	29	61	83	65	29.5	57	14	14	200	22	G1 1/4	87	
BK3 1/4	32	32	111	81	39		106	84.5	39	55	16.5	17	320	22	G1 1/4	115	
BK3 1/2	40	38	130	104	53		127	106	53	65	16.5	17	320	24	G1 1/2	136	
BK3 2	50	48	150	118	58		137	116	58	75	16.5	17	320	26	G2	146	

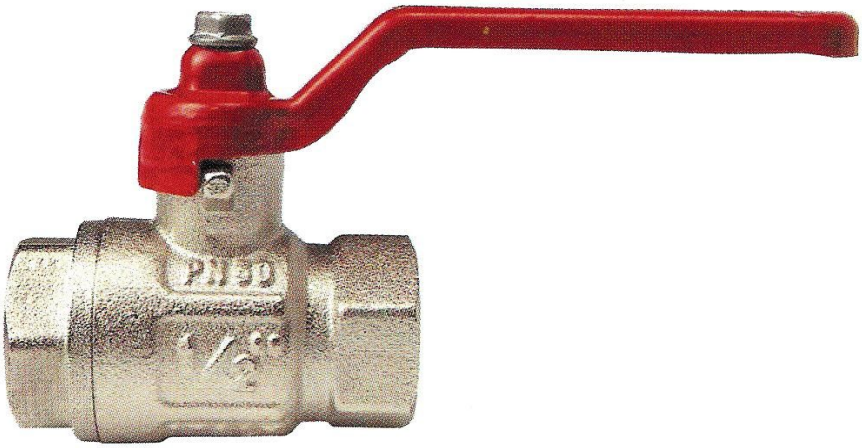

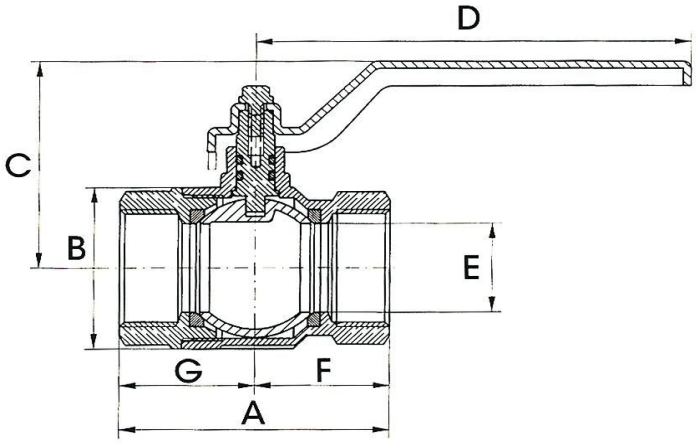

CARATTERISTICHE:
Adatta ad ogni tipo di impianto idraulico, di riscaldamento e pneunatico. Ideale per acqua calda/fredda, olii vari, aria compressa. Temperatura minima e massima di esercizio: ***ARIA*** *15°C, 220°C /* ***ACQUA*** *0°C, 150°C in assenza di vapore /* ***GAS*** *15°C, 60°C*

CODICE	Dimensioni in mms	A	B	C	D	E	F	G	Pressione atmosfere	LBS	Imb. per scatola	Imb. per cartone
120 - 1/4	1/4"											
120 - 3/8	3/8"											
120 - 1/2	1/2"											
120 - 3/4	3/4"											
120 - 1	1"											
120 - 1 1/4	1"1/4											
120 - 1 1/2	1"1/2											
120 - 2	2"											
120 - 2 1/2	2"1/2	148	122	122	250	65	74.5	73.5	18	260	1	8
120 - 3	3"	168	142	134	250	80	84	84	16	230	1	6
120 - 4	4"	204	180	151	250	100	101	103	14	200	1	5

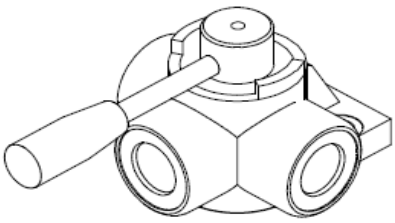

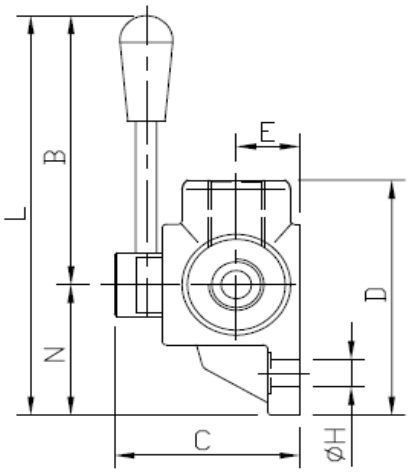

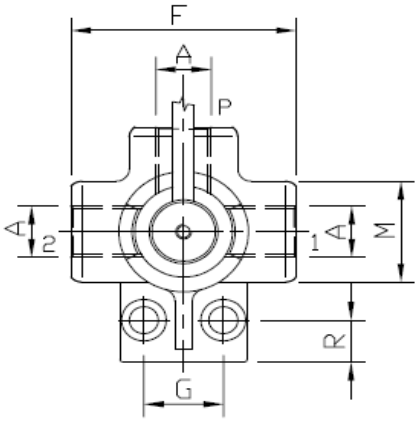

CODICE	A	B	C	D	E	F	G	Pressione bar	H	L	M
MP31/4	1/4'	128	62	78.5	21	73	24	315	8.5	169	35
MP33/8	3/8'	128	62	78.5	21	73	24	315	8.5	169	35
MP31/2	1/2'	128	70	96	25	85	30	280	11	180	42
MP33/4	3/4'	125	80	100	28	91	32	250	11	180	47
MP31	1'	140	90	113	32.5	98	32	220	11	207	56
MP31.1/2	1.1/2"	140	115	144	44	128	45	200	11	220	80

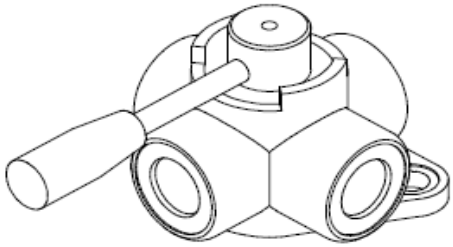

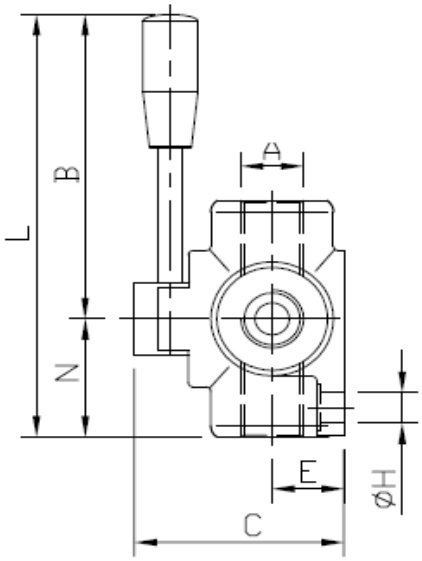

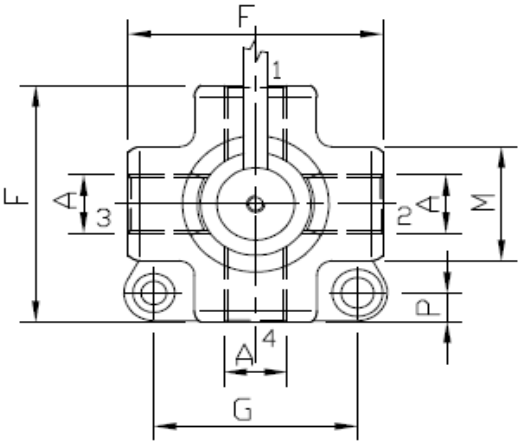

CODICE	A	B	C	E	F	G	H	Pressione bar	L	M	N
MP41/4	1/4’	126	70	24	77	53.5	8.5	300	165	35	39
MP43/8	3/8’	126	70	24	77	53.5	8.5	300	165	35	39
MP41/2	1/2’	125	79	28	90	68	8.5	250	170	42	45
MP43/4	3/4’	142	90	32	95	74	8.5	220	190	49	48
MP41	1"	146	90	32	95	74	8.5	220	190	49	48

Codice	Ø alla consegna	Ø minimo	T Standard	T Inox	Coppia serr. rac. Nm
ABA 15-24	25	15	0.8	0.8	4-5
ABA 19-28	29	19			
ABA 22-32	33	22			
ABA 26-38	39	26			
ABA 32-44	45	32	1		5-6
ABA 38-50	51	38			
ABA 44-56	57	44			
ABA 50-65	66	50			
ABA 58-75	76	58			
ABA 68-85	86	68			
ABA 77-95	96	77			
ABA 87-112	113	87			
ABA 106-138	139	106			
ABA 132-165	166	132			
ABA 150-180	181	150			
ABA 175-205	206	175			
ABA 200-231	232	200			
ABA 226-256	257	226			
ABA 251-282	283	251			
ABA 277-307	308	277			

*serie più alta

Codice	Ø alla consegna	Ø minimo	Altezza
TORRO16X25	25	16	12
TORRO23X35	35	23	12
TORRO25X40	40	25	12
TORRO35X50	50	35	12
TORRO40X60	60	40	12
TORRO50X70	70	50	12
TORRO60X80	80	60	12
TORRO70X90	90	70	12
TORRO100x120	120	100	12

CODICE	A	B	R	E	kG
MIKSUPRA 17-19	18	19.8	M6	8	18.890
MIKSUPRA 19-21	18	19.8	M6	8	19,460
MIKSUPRA 21-23	18	19.8	M6	8	20.160
MIKSUPRA 23-25	18	19.8	M6	8	20.160
MIKSUPRA 25-27	18	19.8	M6	8	21.050
MIKSUPRA 27-29	18	19.8	M6	8	32.980
MIKSUPRA 29-31	20	22	M7	10	32.980
MIKSUPRA 31-34	20	22	M7	10	34.210
MIKSUPRA 34-37	20	22	M7	10	35.440
MIKSUPRA 37-40	20	22	M7	10	35.440
MIKSUPRA 40-43	20	22	M7	10	36.440
MIKSUPRA 43-47	20	22	M7	10	68.150
MIKSUPRA 47-51	20	22	M7	10	69.490
MIKSUPRA 51-55	20	22	M7	10	71.500
MIKSUPRA 55-59	20	22	M7	10	73.330
MIKSUPRA 59-63	20	22	M7	10	75.340
MIKSUPRA 63-68	20	22	M7	10	76.680
MIKSUPRA 68-73	25	27.5	M8	13	112.260
MIKSUPRA 73-79	25	27.5	M8	13	116.280
MIKSUPRA 79-85	25	27.5	M8	13	119.630
MIKSUPRA 85-91	25	27.5	M8	13	124.640
MIKSUPRA 91-97	25	27.5	M8	13	127.320
MIKSUPRA 97-104	25	27.5	M8	13	132.010
MIKSUPRA 104-112	25	27.5	M8	13	141.560
MIKSUPRA 112-121	25	27.5	M8	13	146.250
MIKSUPRA 121-130	25	27.5	M8	13	150.950
MIKSUPRA 130-140	28	31	M10	15	205.070
MIKSUPRA 140-150	28	31	M10	15	211.080
MIKSUPRA 150-162	28	31	M10	15	233.590
MIKSUPRA 162-174	28	31	M10	15	249.670
MIKSUPRA 174-187	28	31	M10	15	252.350
MIKSUPRA 187-200	28	31	M10	15	261.730
MIKSUPRA 200-213	28	31	M10	15	271.110
MIKSUPRA 213-226	28	31	M10	15	280.490
MIKSUPRA 226-239	28	31	M10	15	289.870
MIKSUPRA 239-252	28	31	M10	15	299.920

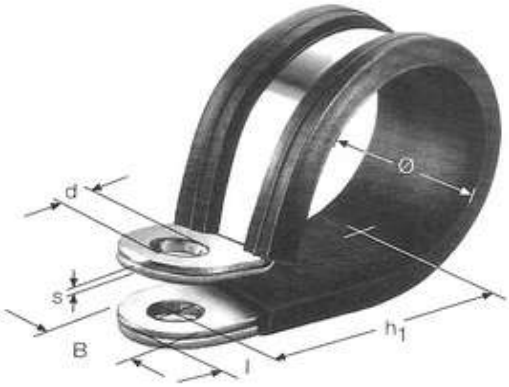

Ø	12	15	20
6	RSGU1 06/12 W1	RSGU1 06/15 W1	
8	RSGU1 08/12 W1	RSGU1 08/15 W1	
10	RSGU1 10/12 W1	RSGU1 10/15 W1	RSGU1 10/12 W1
12	RSGU1 12/12 W1	RSGU1 12/15 W1	RSGU1 12/20 W1
13	RSGU1 13/12 W1	RSGU1 13/15 W1	RSGU1 13/20 W1
14	RSGU1 14/12 W1	RSGU1 14/15 W1	RSGU1 14/20 W1
15	RSGU1 15/12 W1	RSGU115/15 W1	RSGU1 15/20 W1
16	RSGU1 16/12 W1	RSGU1 16/15 W1	RSGU1 16/20 W1
18	RSGU1 18/12 W1	RSGU1 18/15 W1	RSGU1 18/20 W1
19	RSGU1 19/12 W1	RSGU1 19/15 W1	RSGU1 19/20 W1
20	RSGU1 20/12 W1	RSGU1 20/15 W1	RSGU1 20/20 W1
21	RSGU121/12 W1	RSGU121/15 W1	
22	RSGU1 22/12 W1	RSGU1 22/15 W1	RSGU1 22/20 W1
23		RSGU1 23/15 W1	RSGU1 23/20 W1
24			RSGU1 24/20 W1
25		RSGU1 25/15 W1	RSGU1 25/20 W1
26		RSGU1 26/15 W1	
28		RSGU1 28/15 W1	RSGU1 28/20 W1
30		RSGU1 30/15 W1	RSGU1 30/20 W1
32		RSGU1 32/15 W1	RSGU1 32/20 W1
34		RSGU1 34/15 W1	RSGU1 34/20 W1
35		RSGU1 35/15 W1	RSGU1 35/20 W1
36			RSGU1 36/20 W1
38			RSGU1 38/20 W1
40			RSGU1 40/20 W1

	12	15	20
d	5,3 (M 5)	6,4 (M 6)	8,4 (M 8)
h1	8,0 + Ø/2	11,2 + Ø/2	14,5 + Ø/2
l	5	6	8.5
s	0.5	Ø 14= 0,6 fr Ø 14= 0,6	Ø 25= 0,8 fr Ø 26= 1,0
b1	15	18.5	25
s2	1.2	1.5	2.0

COLORE	CODICE	LUNGHEZZA mm	LARGHEZZA mm
BIANCO	**10025B**	100	2,5
	13525B	135	2,5
	16025B	160	2,5
	20025B	200	2,5
	14035B	140	3,5
	20035B	200	3,5
	14045B	140	4,5
	16045B	160	4,5
	18045B	180	4,5
	20045B	200	4,5
	28045B	280	4,5
	36045B	360	4,5
	20075B	200	7,5
	28075B	280	7,5
	36075B	360	7,5
	50075B	500	7,5
	75075B	750	7,5
NERO	**10025N**	100	2,5
	13525N	135	2,5
	16025N	160	2,5
	20025N	200	2,5
	14035N	140	3,5
	20035N	200	3,5
	14045N	140	4,5
	16045N	160	4,5
	18045N	180	4,5
	20045N	200	4,5
	28045N	280	4,5
	36045N	360	4,5
	20075N	200	7,5
	28075N	280	7,5
	36075N	360	7,5
	50075N	500	7,5
	75075N	750	7,5
	43090N	430	9,0
	55090N	550	9,0

CODICE	COLORE	LUNGHEZZA mm	LARGHEZZA mm
FAC100X2,5B	BLU	100	2,5
FAC100X2,5BNC	BIANCO		
FAC100X2,5G	GIALLO		
FAC100X2,5R	ROSSO		
FAC100X2,5V	VERDE		

Faschette TY - serie robusta (con chiusura in acciaio)

COLORE	CODICE	LUNGHEZZA mm	LARGHEZZA mm	Resistenza alla trazione (kg)
NERO	**TY524MXR**	140	3.6	13.3
	TY24MX	140	3.6	13.3
	TY525MR	186	4.8	22.6
	TY25M	186	4.8	22.6
	TY5232MR	203	2.3	8.2
	TY232M	203	2.3	8.2
	TY5253MXR	290	4.8	22.6
	TY253MX	290	4.8	22.6
	TY527MXR	340	7	55.1
	TY27MX	340	7	55.1
	TY528MXR	361	4.8	22.6
	TY28MX	361	4.8	22.6

Codice:	Misure :
RA4	D.4
RA6	D.6
RA8	D.8
RA10	D.10
RA11	D.11
RA12	D.12
RA13	D.13 - 1/4"
RA14	D.14
RA16	D.16
RA17	D.17 - 3/8"
RA18	D.18
RA19	D.19
RA20	D.20
RA21	D.21 - 1/2"
RA22	D.22
RA23	D.23 - 5/8"
RA24	D.24
RA26	D.26
RA27	D.27 - 3/4"
RA28	D.28
RA30	D.30
RA32	D.32
RA33	D.33 - 1"
RA42	D.42 - 1.1/4"
RA48	D.48 - 1.1/2"
RA60	D.60 - 2"
Misure Metriche:	**mm**
RAL-6M	6X10
RAL-8M	8X12
RAL-10M	10X16
RAL-12M	12X18
RAL-14M	14X20
RAL-16M	16X22
RAL-18M	18X24
RAL-20M	20X26
RAL-22M	22X28
RAL-24M	24X30
RAL-28M	28X34
RAL-30M	30X36

Codice:	Misure:
RR4	D.4X8X1,5
RR5	D.5X9X1,5
RR6	D.6
RR6X10X1	D.6X10X1
RR8	D.8 8X14
RR8X12X1	D.8X12X1
RR11	D.11X15X1
RR11X15X1	D.11X15X1
RR12	D.12 12X18
RR12X16	D.12 12X16
RR12X24X1	D.12 12X24X1
RR13	D.13-1/4 13,5X19
RR13X3	D.13X3
RR14	D.14 14X20X1,5
RR15	D.15X21X1,5
RR16	D.16 16X22
RR16X22X3	D.16X22X3
RR17	D.17-3/8 17X23
RR17X23X4	D.17-3/8 17X23X4
RR17X3	D.17X23X3
RR18	D.18 18X24
RR19	D.19
RR20	D.20X26
RR21	D.21-1/2 21,5X27
RR21X2,5	D.21-1/2 21,5X27X2,5 mm
RR21X3	D.21X3
RR22	D.22 22X28
RR23	D.23(5/8)x30x1.5
RR24	D.24
RR26	D.26 26,5X32
RR27	D.27-3/4 27X33
RR28	D.28
RR30	D.30X36
RR32	D.32
RR33	D.33-1" 33,5X40
RR33X3	D.33X3
RR42	D.42-1.1/4 42X50
RR48	D.48-1.1/2 48X55
RR48X55X4	D.48-1.1/2 48X55X4
RR60	D.60-2"
RR75	D.75-2.1/2
RR88	D.88-3"

* AC = Autocentranti

Codice:	Diametro:
BONDED1/8AC	1/8"
BONDED1/4AC	1/4"
BONDED3/8AC	3/8"
BONDED1/2AC	1/2"
BONDED5/8AC	5/8"
BONDED3/4AC	3/4"
BONDED1AC	1"
BONDED1.1/4AC	1.1/4"
BONDED1.1/2AC	1.1/2"
BONDED2AC	2"
Misure Metriche:	**mm**
BONDED6AC	6
BONDED12AC	12
BONDED14AC	14
BONDED16AC	16
BONDED18AC	18
BONDED22AC	22
BONDED1/8	1/8"
BONDED1/4	1/4"
BONDED3/8	3/8"
BONDED1/2	1/2"
BONDED5/8	5/8"
BONDED3/4	3/4"
BONDED1	1"
BONDED1.1/4	1.1/4"
BONDED1.1/2	1.1/2"
BONDED2	2"
BONDED2.1/2	2.1/2"
BONDED3	3"
Misure Metriche:	mm
BONDED5	5
BONDED6	6
BONDED8	8
BONDED11	11
BONDED12	12
BONDED14	14
BONDED16	16
BONDED18	18
BONDED19	19
BONDED20	20
BONDED22	22
BONDED24	24
BONDED26	26
BONDED28	28
BONDED30	30
BONDED38	38

Rondelle bonded autocentranti
in INOX + VITON

Codice:	Diametro:
XBONDED1/8	1/8"
XBONDED1/4	1/4"
XBONDED3/8	3/8"
XBONDED1/2	1/2"
XBONDED3/4	3/4"
XBONDED1	1"
XBONDED1.1/4	1.1/4"
XBONDED1.1/2	1.1/2"
XBONDED2	2"

Codice:	Diametro (mm):	Scala (Bar):	Filetto (Gas):
MGRX63-0-1	63	0 - 1	1/4"
MGRX63-0-10	63	0 - 10	1/4"
MGRX63-0-100	63	0 - 100	1/4"
MGRX63-0-1000	63	0 - 1000	1/4"
MGRX63-0-12	63	0 - 12	1/4"
MGRX63-0-16	63	0 - 16	1/4"
MGRX63-0-160	63	0 - 160	1/4"
MGRX63-0-25	63	0 - 25	1/4"
MGRX63-0-250	63	0 - 250	1/4"
MGRX63-0-315	63	0 - 315	1/4"
MGRX63-0-4	63	0 - 4	1/4"
MGRX63-0-40	63	0 - 40	1/4"
MGRX63-0-400	63	0 - 400	1/4"
MGRX63-0-6	63	0 - 6	1/4"
MGRX63-0-600	63	0 - 600	1/4"
MGRX63-0-63	63	0 - 63	1/4"
MGRX100-0-100	100	0 - 100	1/2"
MGRX100-0-16	100	0 - 16	1/2"
MGRX100-0-25	100	0 - 25	1/2"
MGRX100-0-250	100	0 - 250	1/2"
MGRX100-0-315	100	0 - 315	1/2"
MGRX100-0-4	100	0 - 4	1/2"
MGRX100-0-40	100	0 - 40	1/2"
MGRX100-0-400	100	0 - 400	1/2"
MGRX100-0-6	100	0 - 6	1/2"
MGRX100-0-600	100	0 - 600	1/2"

Codice:	Diametro (mm):	Scala (Bar):	Filetto (Gas):
MGSX50-0-400	50	0 - 400	1/4"
MGSX52-0-150	52	0 - 150	1/4"
MGSX63-0-10	63	0 - 10	1/4"
MGSX63-0-100	63	0 - 100	1/4"
MGSX63-0-12	63	0 - 12	1/4"
MGSX63-0-16	63	0 - 16	1/4"
MGSX63-0-160	63	0 - 160	1/4"
MGSX63-0-25	63	0 - 25	1/4"
MGSX63-0-250	63	0 - 250	1/4"
MGSX63-0-315	63	0 - 315	1/4"
MGSX63-0-4	63	0 - 4	1/4"
MGSX63-0-40	63	0 - 40	1/4"
MGSX63-0-400	63	0 - 400	1/4"
MGSX63-0-6	63	0 - 6	1/4"
MGSX63-0-600	63	0 - 600	1/4"
MGSX63-0-63	63	0 - 63	1/4"
MGSX63-0-800	63	0 - 800	1/4"
MGSX100-0-6	100	0 - 6	1/2"
MGSX100-0-600	100	0 - 600	1/2"

Codice:	Diametro (mm):	Scala (Bar):	Filetto (Gas):
MGFX63-0-1,6	63	0 - 1,6	1/4"
MGFX63-0-10	63	0 - 10	1/4"
MGFX63-0-100	63	0 - 100	1/4"
MGFX63-0-1000	63	0 - 1000	1/4"
MGFX63-0-16	63	0 - 16	1/4"
MGFX63-0-160	63	0 - 160	1/4"
MGFX63-0-25	63	0 - 25	1/4"
MGFX63-0-250	63	0 - 250	1/4"
MGFX63-0-315	63	0 - 315	1/4"
MGFX63-0-4	63	0 - 4	1/4"
MGFX63-0-40	63	0 - 40	1/4"
MGFX63-0-400	63	0 - 400	1/4"
MGFX63-0-6	63	0 - 6	1/4"
MGFX63-0-600	63	0 - 600	1/4"
MGFX63-0-63	63	0 - 63	1/4"
MGFX100-0-10	100	0 - 10	1/2"
MGFX100-0-100	100	0 - 100	1/2"
MGFX100-0-1000	100	0 - 1000	1/2"
MGFX100-0-16	100	0 - 16	1/2"
MGFX100-0-160	100	0 - 160	1/2"
MGFX100-0-2,5	100	0 - 2,5	1/2"
MGFX100-0-25	100	0 - 25	1/2"
MGFX100-0-250	100	0 - 250	1/2"
MGFX100-0-4	100	0 - 4	1/2"
MGFX100-0-40	100	0 - 40	1/2"
MGFX100-0-400	100	0 - 400	1/2"
MGFX100-0-6	100	0 - 6	1/2"
MGFX100-0-600	100	0 - 600	1/2"
MGFX100-0-63	100	0 - 63	1/2"

o-ring standard colore nero - viton (per alta temperatura) colore verdi

Codice:	Descrizione:
BOX A	KIT OR INCH 30TIPI DA OR006 A OR216
BOX A-VITON	KIT OR INCH 30TIPI DA OR006 A OR216
BOX B	KIT OR INCH 24TIPI DA OR019 A OR329
BOX C	KIT OR METR.30TIPI DA 4X2 A 26,2X3
BOX C-VITON	KIT OR METR.30TIPI DA 4X2 A 26,2X3
BOX D	KIT OR METR.24TIPI DA 18X2 A 50X5
BOX F	KIT OR INCH 32TIPI DA 2,6X1,9 A 43,82X5,33
BOX G	KIT OR INCH 30 TIPI DA 2,9X1,78 A 43,82X5,33
BOX G - VITON	KIT OR INCH30TIPI DA2,9X1,78A VITON
BOX H	KIT OR METR.30TIPI DA 3X2 A 28X3
BOX K	KIT OR INCH 32 TIPI DA 12,42X1,78 A 50,40X3,53
BOX L	KIT OR METR.32TIPI DA 12X2 A 47X4
BOX S	KIT OR INCH 30TIPI

Misura Sezione (mm):
1
1.5
1.6
2
2.4
2.5
3
4
5
6
7

Descrizione:
O-Ring con sezione metrica, disponibili in tutte le misure di diametro (D). Composizione Materiale NBR Temperatura: -30 +100

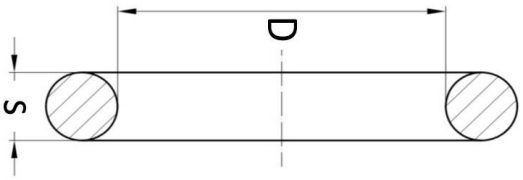

Misura Sezione (mm):
1.78
2.62
3.53
5.34
6.99

Descrizione:
O-Ring con sezione in pollici, disponibili in tutte le misure di diametro (D). Composizione Materiale NBR Temperatura: -30 +100

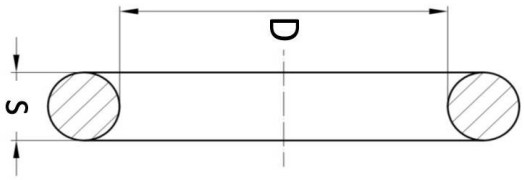

Misura Sezione (mm):
1.78
2.62
3.53
5.34
6.99
1
1.5
1.6
2
2.4
2.5
3
4
5
6
7

Descrizione:

O-Ring al Viton con sezione in pollici e metriche, disponibili in tutte le misure di diametro (D).
Composizione Materiale VITON Temperatura: -15 +200

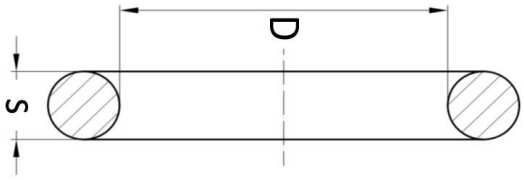

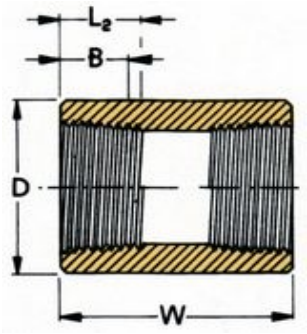

BASE	CODICE	D	W	B	L2
1/8"	MANIC/3-1/8"	15.7	31.7	6.4	6.7
1/4"	MANIC/3-1/4"	19	35	8.1	10.2
3/8"	MANIC/3-3/8"	22.3	38.1	9.1	10.4
1/2"	MANIC/3-1/2"	28.5	47.7	10.9	13.6
3/4"	MANIC/3-3/4"	35	50.8	12.7	13.9
1"	MANIC/3-1"	44.5	60.4	14.7	17.3
1" 1/4	MANIC/3-1"1/4	57.1	66.5	17	17.9
1" 1/2	MANIC/3-1"1/2	63.5	79.2	17.8	18.4
2	MANIC/3-2"	76.2	85.8	19	19.2
2" 1/2	MANIC/3-2"1/2	91.9	91.9	23.6	28.9
3	MANIC/3-3"	107.9	107.9	25.9	30.5
4	MANIC/3-4"	139.7	120.6	27.7	33

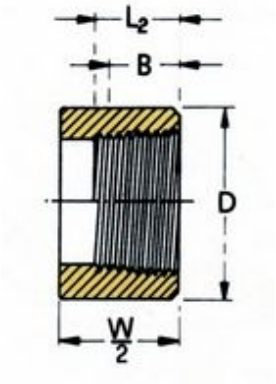

BASE	CODICE	D	W	B	L2
1/8"	MEZZI-M/3-1/8"	15.7	31.7	6.4	6.7
1/4"	MEZZI-M/3-1/4"	19	35	8.1	10.2
3/8"	MEZZI-M/3-3/8"	22.3	38.1	9.1	10.4
1/2"	MEZZI-M/3-1/2"	28.5	47.7	10.9	13.6
3/4"	MEZZI-M/3-3/4"	35	50.8	12.7	13.9
1"	MEZZI-M/3-1"	44.5	60.4	14.7	17.3
1" 1/4	MEZZI-M/3-1"1/4	57.1	66.5	17	17.9
1" 1/2	MEZZI-M/3-1"1/2	63.5	79.2	17.8	18.4
2	MEZZI-M/3-2"	76.2	85.8	19	19.2
2" 1/2	MEZZI-M/3-2"1/2	91.9	91.9	23.6	28.9
3	MEZZI-M/3-3"	107.9	107.9	25.9	30.5
4	MEZZI-M/3-4"	139.7	120.6	27.7	33

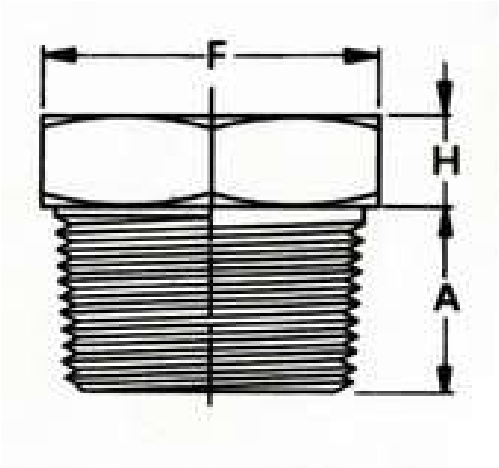

CODICE	FILETTO NPT
TAPP/3-1/8	1/8"
TAPP/3-1/4	1/4"
TAPP/3-3/8	3/8"
TAPP/3-1/2	1/2"
TAPP/3-3/4	3/4"
TAPP/3-1	1"
TAPP/3-1.1/4	1-1/4"
TAPP/3-1.1/2	1-1/2"
TAPP/3-2	2"
TAPP/3-2.1/2	2-1/2"
TAPP/3-3	3"

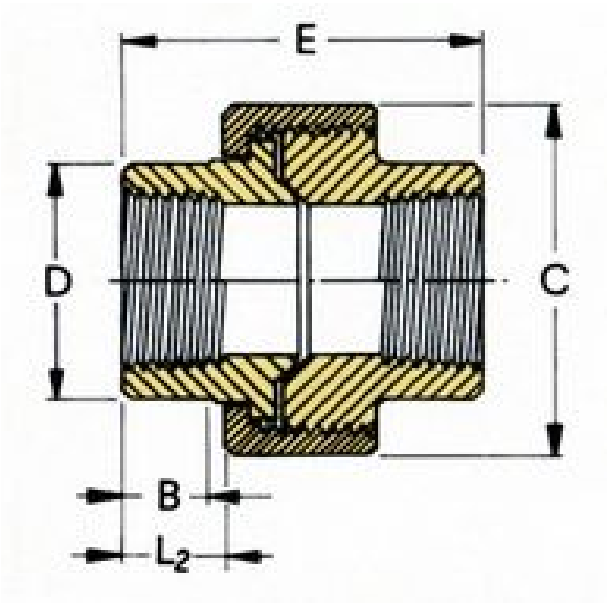

TIPO	CODICE	C	D	E	F	T1	A	B	L2
1/8"	BOCCFF/3-1/8"	35.0	14.7	41.4	63.5	5.0	9.6	6.4	6.7
1/4"	BOCCFF/3-1/4"	35.0	19.1	41.4	63.5	8.0	11.2	8.1	10.2
3/8"	BOCCFF/3-3/8"	40.0	22.9	46.0	68.0	11.0	12.7	9.1	10.4
1/2"	BOCCFF/3-1/2"	46.0	27.7	49.0	75.0	14.0	14.2	10.9	13.6
3/4"	BOCCFF/3-3/4"	55.5	33.5	56.9	81.0	19.0	15.7	12.7	13.9
1"	BOCCFF/3-1"	64.5	41.4	62.0	93.0	24.0	19.0	14.7	17.3
1-1/4"	BOCCFF/3-1-1/4"	78.0	50.5	71.7	102.0	32.0	20.6	17.0	17.9
1-1/2"	BOCCFF/3-1-1/2"	87.0	57.1	76.5	111.0	38.0	20.6	17.8	18.4
2"	BOCCFF/3-2	104.0	70.1	86.1	118.0	49.0	22.3	19.0	19.2
2-1/2"	BOCCFF/3-2-1/2"	124.0	85.3	118.0			26.9	23.6	28.9
3"	BOCCFF/3-3"	150.0	102.4	109.0			28.4	25.9	30.5
4"	BOCCFF/3-4"	187.0	136.5	153.0			31.7	27.7	33.0

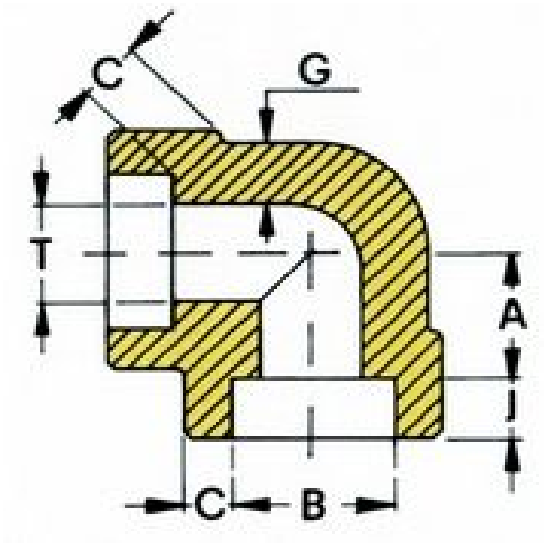

TIPO	CODICE	A		C		G	T		B		J
		MAX	MIN	AVE	MIN	MIN	MAX	MIN	MAX	MIN	MIN
1/8"	GOMS-90/3-1/8"	11.9	10.4	3.2	3.2	2.4	7.6	6.1	10.9	10.7	9.7
1/4"	GOMS-90/3-1/4"	11.9	10.4	3.8	3.8	3.0	10.0	8.5	14.3	14.1	9.7
3/8"	GOMS-90/3-3/8"	15.0	12.0	4.0	3.5	3.2	13.3	11.8	17.8	17.5	9.7
1/2"	GOMS-90/3-1/2"	17.2	14.2	4.7	4.1	3.7	16.6	15.0	22.0	21.7	9.7
3/4"	GOMS-90/3-3/4"	20.5	17.5	4.9	4.3	3.9	21.7	20.2	27.3	27.0	12.7
1"	GOMS-90/3-1"	24.4	20.3	5.7	5.0	4.5	27.4	25.9	34.1	33.8	12.7
1-1/4"	GOMS-90/3-1-1/4"	28.9	24.9	6.1	5.3	4.9	35.8	34.3	42.8	42.5	12.7
1-1/2"	GOMS-90/3-1-1/2"	33.8	29.7	6.4	5.5	5.1	41.6	40.1	48.9	48.6	12.7
2"	GOMS-90/3-2	40.1	36.1	6.9	6.0	5.5	53.3	51.7	61.4	61.1	15.7
2-1/2"	GOMS-90/3-2-1/2"	43.7	38.6	8.8	7.7	7.0	64.2	61.2	74.2	73.8	15.7
3"	GOMS-90/3-3"	59.7	54.6	9.5	8.3	7.6	79.5	76.4	90.2	89.8	15.7
4"	GOMS-90/3-4"	69.1	64.0	10.7	9.3	8.6	103.8	100.7	115.8	115.4	19.0

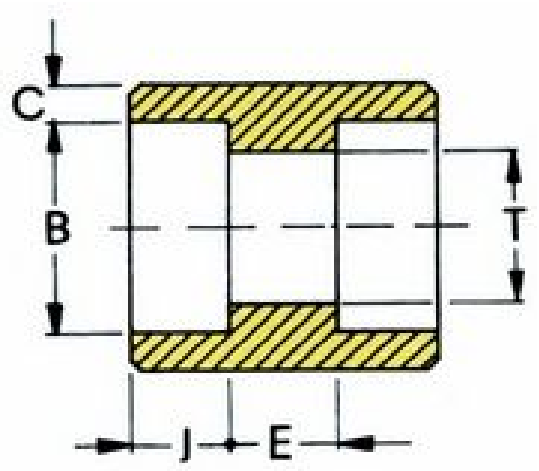

TIPO	CODICE	C		E		F		G	T		B		J
		AVE	MIN	MAX	MIN	MAX	MIN	MIN	MAX	MIN	MAX	MIN	MIN
1/8"	MANICS/3-1/8"	3.2	3.2	7.9	4.8	16.5	15.0	4.0	7.6	6.1	10.9	10.7	9.7
1/4"	MANICS/3-1/4"	3.8	3.3	7.9	4.8	16.5	15.0	7.0	10.0	8.5	14.3	14.1	9.7
3/8"	MANICS/3-3/8"	4.0	3.5	9.4	3.3	19.0	16.0	7.0	13.3	11.8	17.8	17.5	9.7
1/2"	MANICS/3-1/2"	4.7	4.1	12.7	6.6	23.9	20.8	8.0	16.6	15.0	22.0	21.7	9.7
3/4"	MANICS/3-3/4"	4.9	4.3	12.7	6.6	25.4	22.4	10.0	21.7	20.2	27.3	27.0	12.7
1"	MANICS/3-1"	5.7	5.0	16.8	8.6	30.5	26.4	11.0	27.4	25.9	34.1	33.8	12.7
1-1/4"	MANICS/3-1-1/4"	6.1	5.3	16.8	8.6	32.3	28.2	13.0	35.8	34.3	42.8	42.5	12.7
1-1/2"	MANICS/3-1-1/2"	6.4	5.5	16.8	8.6	33.8	29.7	14.0	41.6	40.1	48.9	48.6	12.7
2"	MANICS/3-2	6.9	6.0	23.1	15.0	43.2	39.1	18.0	53.3	51.7	61.4	61.1	15.7
2-1/2"	MANICS/3-2-1/2"	8.8	7.7	24.1	14.0	45.5	40.4	21.0	64.2	61.2	74.2	73.8	15.7
3"	MANICS/3-3"	9.5	8.3	24.1	14.0	47.0	41.9	24.0	79.5	76.4	90.2	89.8	15.7
4"	MANICS/3-4"	10.7	9.3	24.1	14.0	50.3	45.2	30.0	103.8	100.7	115.8	115.4	19.0

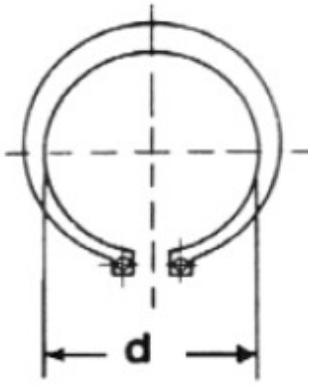

Codice:	Diametro:
SEGER-E/4	4
SEGER-E/5	5
SEGER-E/6	6
SEGER-E/7	7
SEGER-E/8	8
SEGER-E/9	9
SEGER-E/10	10
SEGER-E/11	11
SEGER-E/12	12
SEGER-E/13	13
SEGER-E/15	15
SEGER-E/16	16
SEGER-E/17	17
SEGER-E/18	18
SEGER-E/19	19
SEGER-E/20	20
SEGER-E/21	21
SEGER-E/22	22
SEGER-E/23	23
SEGER-E/24	24
SEGER-E/25	25
SEGER-E/26	26
SEGER-E/27	27
SEGER-E/28	28
SEGER-E/30	30
SEGER-E/31	31
SEGER-E/32	32
SEGER-E/33	33
SEGER-E/34	34
SEGER-E/35	35
SEGER-E/36	36
SEGER-E/38	38
SEGER-E/39	39
SEGER-E/40	40
SEGER-E/41	41
SEGER-E/42	42
SEGER-E/44	44
SEGER-E/45	45
SEGER-E/46	46
SEGER-E/47	47
SEGER-E/48	48
SEGER-E/50	50
SEGER-E/52	52
SEGER-E/54	54
SEGER-E/55	55
SEGER-E/56	56
SEGER-E/57	57
SEGER-E/58	58
SEGER-E/60	60

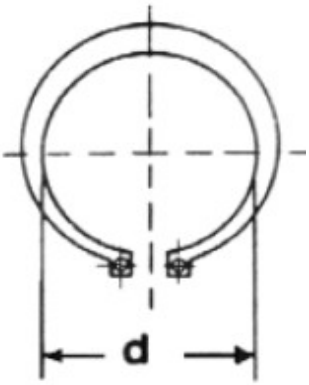

Codice:	Diametro:
SEGER-E/62	62
SEGER-E/63	63
SEGER-E/65	65
SEGER-E/67	67
SEGER-E/68	68
SEGER-E/72	72
SEGER-E/75	75
SEGER-E/77	77
SEGER-E/78	78
SEGER-E/80	80
SEGER-E/82	82
SEGER-E/85	85
SEGER-E/87	87
SEGER-E/88	88
SEGER-E/90	90
SEGER-E/92	92
SEGER-E/95	95
SEGER-E/97	97
SEGER-E/98	98
SEGER-E/102	102
SEGER-E/105	105
SEGER-E/107	107
SEGER-E/108	108
SEGER-E/110	110
SEGER-E/112	112
SEGER-E/115	115
SEGER-E/117	117
SEGER-E/118	118
SEGER-E/120	120
SEGER-E/122	122
SEGER-E/125	125
SEGER-E/127	127
SEGER-E/128	128
SEGER-E/130	130
SEGER-E/132	132
SEGER-E/135	135
SEGER-E/137	137
SEGER-E/138	138
SEGER-E/140	140
SEGER-E/142	142
SEGER-E/147	147
SEGER-E/148	148
SEGER-E/155	155
SEGER-E/160	160
SEGER-E/170	170
SEGER-E/180	180
SEGER-E/185	185
SEGER-E/190	190
SEGER-E/200	200

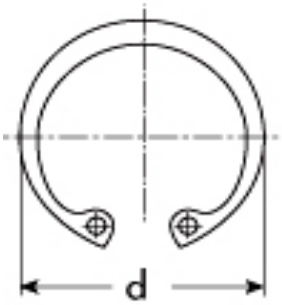

Codice:	Diametro:
SEGER-I/8	8
SEGER-I/10	10
SEGER-I/11	11
SEGER-I/12	12
SEGER-I/13	13
SEGER-I/14	14
SEGER-I/15	15
SEGER-I/16	16
SEGER-I/17	17
SEGER-I/18	18
SEGER-I/19	19
SEGER-I/20	20
SEGER-I/21	21
SEGER-I/22	22
SEGER-I/23	23
SEGER-I/24	24
SEGER-I/25	25
SEGER-I/26	26
SEGER-I/27	27
SEGER-I/28	28
SEGER-I/29	29
SEGER-I/30	30
SEGER-I/31	31
SEGER-I/32	32
SEGER-I/33	33
SEGER-I/34	34
SEGER-I/35	35
SEGER-I/36	36
SEGER-I/37	37
SEGER-I/38	38
SEGER-I/39	39
SEGER-I/40	40
SEGER-I/41	41
SEGER-I/42	42
SEGER-I/43	43
SEGER-I/44	44
SEGER-I/45	45
SEGER-I/46	46
SEGER-I/47	47
SEGER-I/48	48
SEGER-I/49	49
SEGER-I/50	50
SEGER-I/51	51
SEGER-I/52	52
SEGER-I/53	53
SEGER-I/54	54
SEGER-I/55	55
SEGER-I/56	56
SEGER-I/57	57

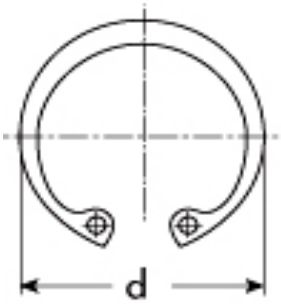

Codice:	Diametro:
SEGER-I/58	58
SEGER-I/60	60
SEGER-I/62	62
SEGER-I/63	63
SEGER-I/65	65
SEGER-I/67	67
SEGER-I/68	68
SEGER-I/70	70
SEGER-I/72	72
SEGER-I/75	75
SEGER-I/77	77
SEGER-I/78	78
SEGER-I/80	80
SEGER-I/82	82
SEGER-I/85	85
SEGER-I/87	87
SEGER-I/88	88
SEGER-I/90	90
SEGER-I/92	92
SEGER-I/95	95
SEGER-I/97	97
SEGER-I/98	98
SEGER-I/100	100
SEGER-I/102	102
SEGER-I/105	105
SEGER-I/107	107
SEGER-I/108	108
SEGER-I/110	110
SEGER-I/112	112
SEGER-I/115	115
SEGER-I/117	117
SEGER-I/118	118
SEGER-I/120	120
SEGER-I/122	122
SEGER-I/125	125
SEGER-I/127	127
SEGER-I/128	128
SEGER-I/130	130
SEGER-I/132	132
SEGER-I/135	135
SEGER-I/138	138
SEGER-I/140	140
SEGER-I/142	142
SEGER-I/145	145
SEGER-I/147	147
SEGER-I/148	148
SEGER-I/150	150
SEGER-I/160	160
SEGER-I/165	165

OLIO AD ALTO INDICE DI VISCOSITÀ PER COMANDI OLEODINAMICI

Codice:	Descrizione:
HF32/5	INDICE DI VISCOSITA' 32 - FORMATO DA 5 LITRI
HF32/25	INDICE DI VISCOSITA' 32 - FORMATO DA 25 LITRI
HF46/5	INDICE DI VISCOSITA' 46 - FORMATO DA 5 LITRI
HF46/25	INDICE DI VISCOSITA' 46 - FORMATO DA 25 LITRI
HF68/5	INDICE DI VISCOSITA' 68 - FORMATO DA 5 LITRI
HF68/20	INDICE DI VISCOSITA' 68 - FORMATO DA 20 LITRI

Codice:	Descrizione:
BLU2K05	TUBO BLU ANTIMACCHIA MISURA 5/16"
BLU2K06	TUBO BLU ANTIMACCHIA MISURA 3/8"
CP05FK22	RACCORDO TUBO 5\16" FILETTO 22X1.5
CP06FK22	RACCORDO TUBO 3\8" FILETTO 22X1.5
RL16	PISTOLA SERE LEGGERA - 176BAR - 30L\MIN
RL22	PISTOLA SERE PESANTE - 350BAR - 40L\MIN

Codice:	Descrizione:
IDROGG1/4MF	GIUNTO GIREVOLE M\F IN OTTONE FILETTO 1\4"
IDROGG1/2MF	GIUNTO GIREVOLE M\F IN OTTONE FILETTO 1\2"
IDROGG3/8MF	GIUNTO GIREVOLE M\F IN OTTONE FILETTO 3\8"
IDROMM1/4MF	RIDUZIONE IN OTTONE M 1\4" GAS - M 22X1.5
IDROMM1/2MF	RIDUZIONE IN OTTONE M 1/2" GAS - M 22X1.5
IDROMM3/8MF	RIDUZIONE IN OTTONE M 3/8" GAS - M 22X1.5
IDROMF1/4MF	RIDUZIONE IN OTTONE M 22X1.5 - F 1\4"
IDROMF1/2MF	RIDUZIONE IN OTTONE M 22X1.5 - F 1\2"
IDROMF3/8MF	RIDUZIONE IN OTTONE M 22X1.5 - F 3\8"
IRIDRO1/2-22	ATTACCO RAPIDO M.1/2 F.22X1,5
IRIDRO1/2F22	ATTACCO RAPIDO F.1/2 F.22X1,5
IRIDRO1/4-22	ATTACCO RAPIDO M.1/4 F.22X1,5
IRIDRO1/4F22	ATTACCO RAPIDO F.1/4 F.22
IRIDRO3/8-22	ATTACCO RAPIDO M.3/8 F.22X1,5
IRIDRO3/8F22	ATTACCO RAPIDO F.3/8 F.22X1,5

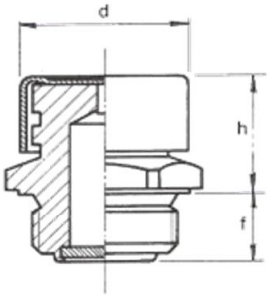

TSF

TIPO	GAS	D	H	F	E
TSF 1/4	1/4"	16.5	17	8	17
TSF 3/8	3/8"	22	19	10	22
TSF 1/2	1/2"	26	21	12	27
TSF 3/4	3/4"	30	24	14	32
TSF 1	1"	38	29	16	40
TSF 1 1/4	1" 1/4	50	33	16	50
TSF 1 1/2	1" 1/2	55	35	16	55
TSF 2	2"	70	40	16	70
TSF 14x1,5	14x1,5	16.5	17	17	17
TSF 16x1,5	16x1,5	22	19	19	22
TSF 18x1,5	18x1,5	22	19	19	22
TSF 20x1,5	20x1,5	24	21	21	24
TSF 22x1,5	22x1,5	26	21	21	27
TSF 24x2	24x2	30	24	24	30
TSF 30x2	30x2	30	25	25	36
TSF 33x2	33x2	38	29	29	40
TSF 42x3	42x3	50	33	33	50
TSF 48x3	48x3	55	35	35	55
TSF 60x4	60x4	70	40	40	70

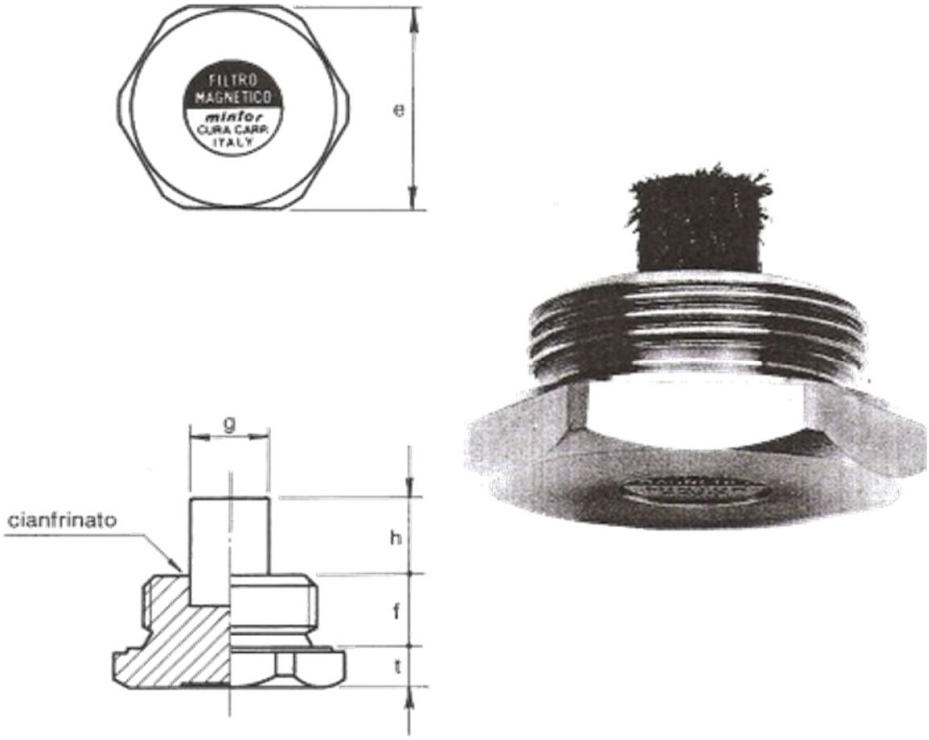

TSCM

TIPO	GAS	E	G	H	F	T
TSCM 1/8	1/8	14	5	6	8	5
TSCM 1/4	1/4	17	5	6	8	6
TSCM 3/8	3/8	22	6	6	10	7
TSCM 1/2	1/2	27	8	8	10	7
TSCM 3/4	3/4	32	10	10	12	8
TSCM 1	1	40	15	15	14	8
TSCM 1 1/4	1 1/4	50	15	15	15	10
TSCM 1 1/2	1 1/2	55	15	15	15	10
TSCM 2	2	70	15	15	17	12
TSCM 10x1	10x1	14	5	6	8	5
TSCM 12x1,5	12x1,5	17	5	6	8	6
TSCM 14x1,5	14x1,5	17	5	6	8	6
TSCM 16x1,5	16x1,5	22	6	6	10	7
TSCM 18x1,5	18x1,5	22	6	6	10	7
TSCM 20x1,5	20x1,5	24	8	8	10	7
TSCM 22x1,5	22x1,5	27	8	8	10	7
TSCM 24x2	24x2	30	10	10	12	8
TSCM 30x2	30x2	36	10	10	12	8
TSCM 33x2	33x2	40	15	15	14	8
TSCM 42x3	42x3	50	15	15	15	10
TSCM 48x3	48x3	55	15	15	15	10
TSCM 60x3	60x4	70	15	15	17	12

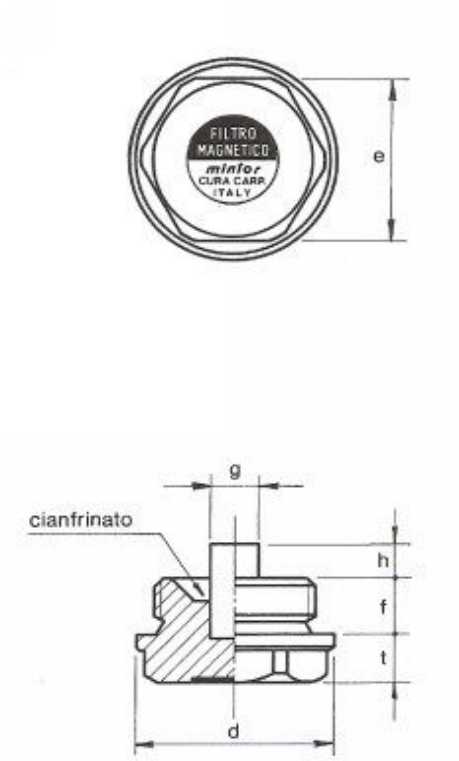

TSCM/F

TIPO	GAS	E	G	H	F	T	D
TSCM/F 1/8	1/8	10	5	4	8	8	14
TSCM//F 1/4	1/4	14	5	4	8	8	18
TSCM/F 3/8	3/8	18	5	5	9	8	22
TSCM/F 1/2	1/2	22	6	6	11	9	28
TSCM/F 3/4	3/4	27	10	6	12	10.5	32
TSCM/F 1	1	34	10	7	14	10.5	40
TSCM/F 10x1	10x1	10	5	4	8	8	14
TSCM/F 14x1,5	14x1,5	14	5	4	8	8	18
TSCM/F 16x1,5	16x1,5	18	5	5	9	8	22
TSCM/F 18x1,5	18x1,5	18	5	5	9	9	24
TSCM/F 20x1,5	20x1,5	20	6	6	10	9	26
TSCM/F 22x1,5	22x1,5	22	6	6	11	9	28
TSCM/F 24x2	24x2	24	8	6	12	9	30
TSCM/F30x2	30x2	30	10	6	12	10,5	38
TSCM/F 33x2	33x2	34	10	7	14	10.5	40

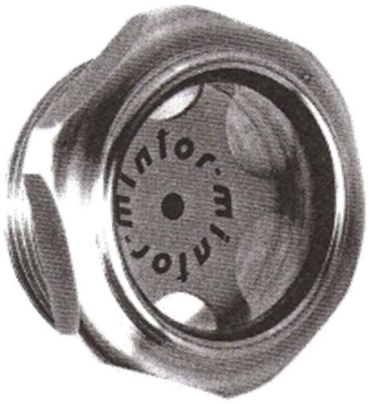

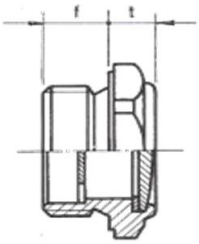

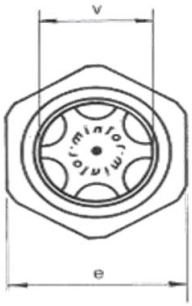

TLA

***FORNIBILI ANCHE IN PLASTICA CODICE = KL**

TIPO	GAS	F	T	V	E
TLA 1/4	1/4	8	7	10	17
TLA 3/8	3/8	9	7	13	22
TLA 1/2	1/2	10	9	16	27
TLA 3/4	3/4	11	9	21	32
TLA 1	1	14	10	27	40
TLA 1 1/4	1 1/4	15	10	37	50
TLA 1 1/2	1 1/2	15	10	40	55
TLA 2	2	17	14	50	70
TLA 14X1,5	14x1,5	8	7	10	17
TLA 16X1,5	16x1,5	9	7	13	22
TLA 18X1,5	18x1,5	9	7	13	22
TLA 20X1,5	20x1,5	10	7	16	24
TLA 22X1,5	22x1,5	10	9	16	27
TLA 24X1,5	24X1,5	11	9	16	30
TLA 24X2	24X2	11	9	16	30
TLA 25X1,5	25X1,5	11	9	21	32
TLA 27X1,5	27X1,5	11	9	21	32
TLA 30X1,5	30X1,5	11	9	21	36
TLA 30X2	30X2	11	9	21	36
TLA 33X1,5	33X1,5	14	10	27	40
TLA 33X2	33X2	14	10	27	40
TLA 35X1,5	35X1,5	14	10	27	40
TLA 40X1,5	40X1,5	12	10	37	50
TLA 42X3	42X3	15	10	37	50
TLA 48X3	48X3	15	10	40	55
TLA 60X2	60X3	17	14	50	70
TLA 60X4	60X4	17	14	50	70

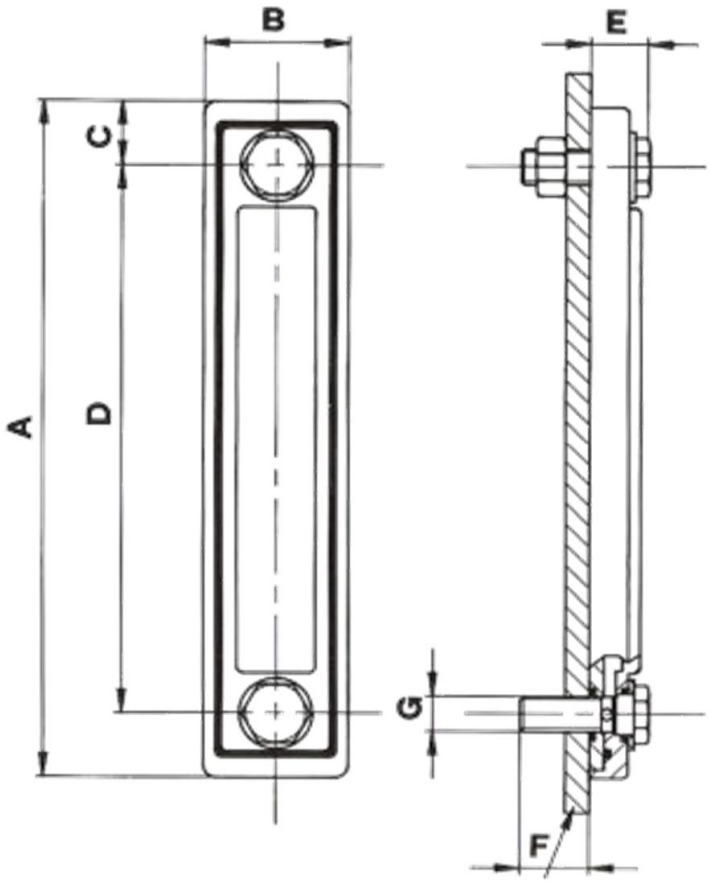

TA Con termometro
SA Senza termometro

GUARNIZIONI IN GOMMA NITRILICA

LVP

TIPO	A	B	C	D	E	F	G
LVP1SA/TA	106	31	15	76	19	21	M10
LVP1SA/TA	167	39	20	127	19	23	M12

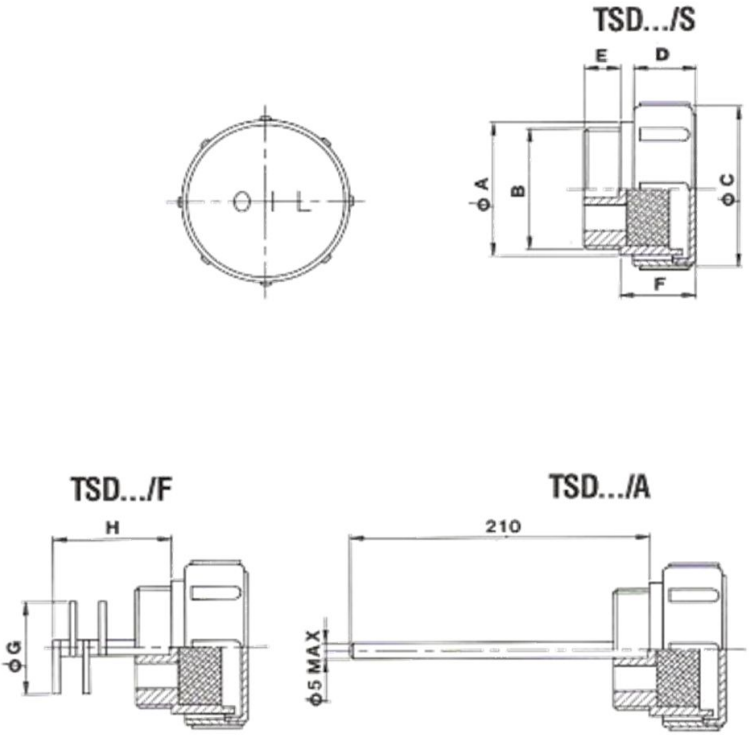

TSD

TIPO	Ø A	B	Ø C	D	E	F	G	H
TSD 16	23	3/8 BSP	35	16	10	21	13.5	36
TSD 20	27	1/2 BSP	39	16	11	21	17.5	36
TSD 26	33	3/4 BSP	45	16	12	21	23,5	37
TSD 33	39	1 BSP	51	19.5	13	24.5	29.5	44
TSD 42	54	1 1/4 BSP	66	54.5	14	29.5	38	47
TSD 48	54	1 1/2 BSP	66	54.5	14	29,5	38	47
TSD 16x1,5	23	M16x1,5	35	16	10	21	13.5	36
TSD 18x1,5	23	M18x1,5	35	16	10	21	13,5	36
TSD 20x1,5	27	M20x1,5	39	16	11	21	17,5	36
TSD 22x1,5	27	M22x1,5	39	16	11	21	17.5	36

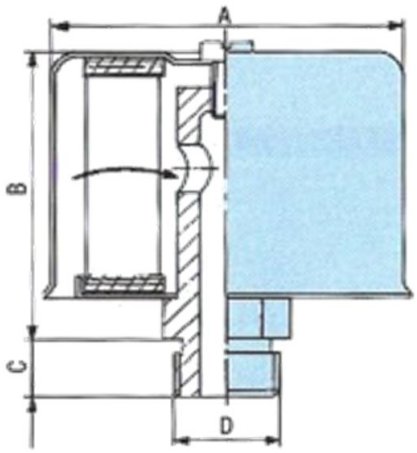

RETE METALLICA			MICROCARTA			DIMENSIONI			
40 MICRON			10 MICRON			mm			
SIZE	FILTRO COMP.	CARTUCCIA	SIZE	FILTRO COMP.	CARTUCCIA	A	B	C	D
200	FS 1/4	CS 1/4	**200**	FS 1/1	CS 1/1	52	44	9	M 12x1,5
200	FS 3/4	CS 1/4	**200**	FS 3/1	CS 1/1	52	45	9	M 18x1,5
200	FS 4/4	CS 1/4	**200**	FS 4/1	CS 1/1	52	46	10	M 22x1,5
200	FS 5/4	CS 1/4	**200**	FS 5/1	CS 1/1	52	44	9	G 1/4
200	FS 6/4	CS 1/4	**200**	FS 6/1	CS 1/1	52	45	9	G 3/8
500	FS 7/4	CS 2/4	**500**	FS 7/1	CS 2/1	72	64	10	G 1/2
1000	FS 8/4	CS 3/4	**1000**	FS 8/1	CS 3/1	108	76	15	G 1

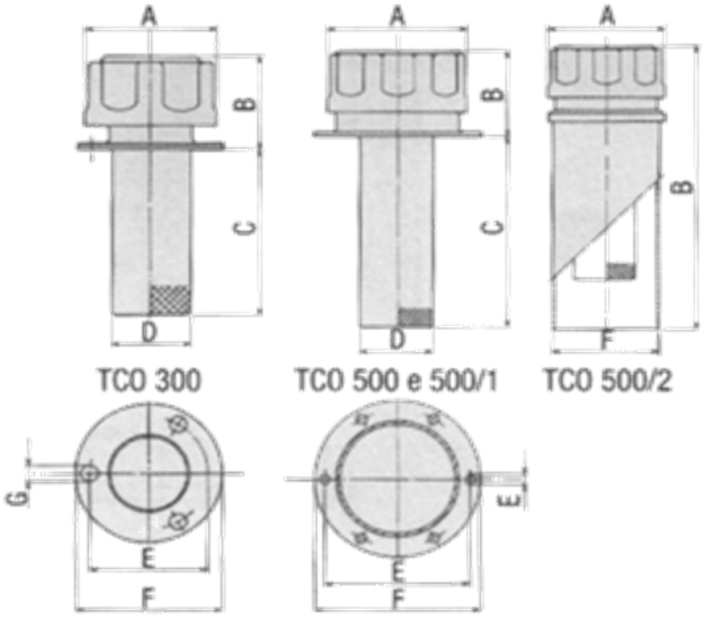

RETE METALLICA		MICROCARTA		DIMENSIONI						
40 MICRON		10 MICRON		mm						
SIZE	FILTRO COMP.	SIZE	FILTRO COMP.	A	B	C	D	E	F	G
300	TCO 300	**270**	TCO 301	46	35	63	28	41	51	5,5
500	TCO 500	**470**	TCO 501	70	46	100	38	73	84	5,5
500	TCO 500/1	**470**	TCO 501/1	70	46	100	38		84	
500	TCO 500/2	**470**	TCO 501/2	70	180				63,5	

CARATTERISTICHE:
Consentono la regolazione del flusso in entrambi i sensi. Sono equipaggiate di uno spillo adeguatamente configurato così da ottenere:
- efficace tenuta metallica
- linearità di flusso nell'apertura
- regolazione accurata

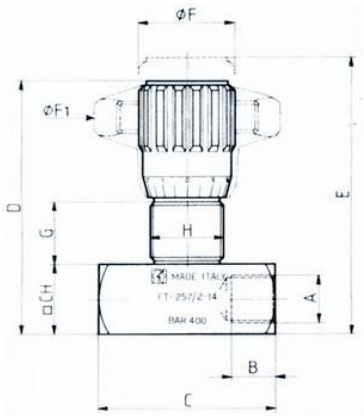

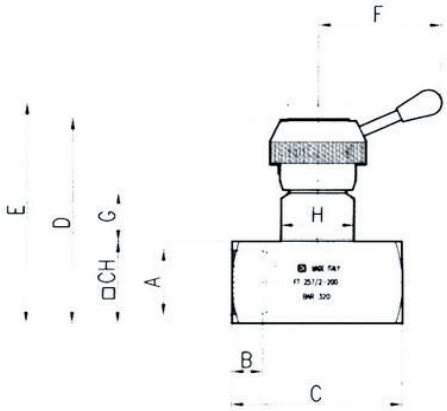

FT 257/2

TIPO	A	B	C	D	E	F	F1	G	H	CH	PESO KG
18	1/8"G	8.5	38	59	64	22	40	13.5	M17X1	16	0.110
14	1/4"G	12.5	49	71	78	27	50	17	M20X1	20	0.200
38	3/8"G	12.5	59	84	93	33	70	19.5	M25X1,5	25	0.375
12	1/2"G	15.5	68	97	107	38	80	21	M30X1,5	30	0.600
34	3/4"G	17	86	120.5	132.5	47	100	26.5	M40X1,5	40	1.250
100	1"G	20	105	151.5	167.5	58	120	35	M50X1,5	50	2.550
114	1 1/4"G	22	120	156.5	172.5	58	120	35	M50X1,5	55	3.000
112	1 1/2"G	24	134	167	181	58	120	35	M55X2	65	4.217
200	2"G	27	150	188	202	85	/	44	M65X2	75	7.300

CARATTERISTICHE:
Hanno la funzione di regolare o intercettare il flusso in una direzione, consentendo il ritorno libero in quella opposta.

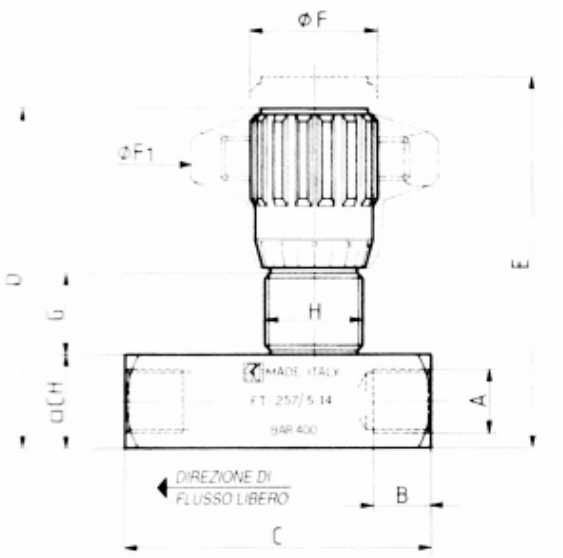

FT 257/5

TIPO	A	B	C	D	E	F	F1	G	H	CH	PESO KG
18	1/8"G	8.5	50	59	64	22	40	13.5	M17X1	16	0.130
14	1/4"G	12.5	66	71	78	27	50	17	M20X1	20	0.250
38	3/8"G	12.5	79	84	93	33	70	19.5	M25X1,5	25	0.500
12	1/2"G	15.5	94.5	97	107	38	80	21	M30X1,5	30	0.750
34	3/4"G	17	115	120.5	132.5	47	100	26.5	M40X1,5	40	1.600
100	1"G	20	138.5	151.5	167.5	58	120	35	M50X1,5	50	3.050
114	1 1/4"G	22	157	156.5	172.5	58	120	35	M50X1,5	55	3.750
112	1 1/2"G	24	190	167	181	58	120	35	M55X2	65	5.760
200	2"G	27	228	188	202	85	/	44	M65X2	75	10.000

CARATTERISTICHE:
Hanno la funzione di regolare o intercettare il flusso in una direzione, consentendo il ritorno libero in quella opposta.

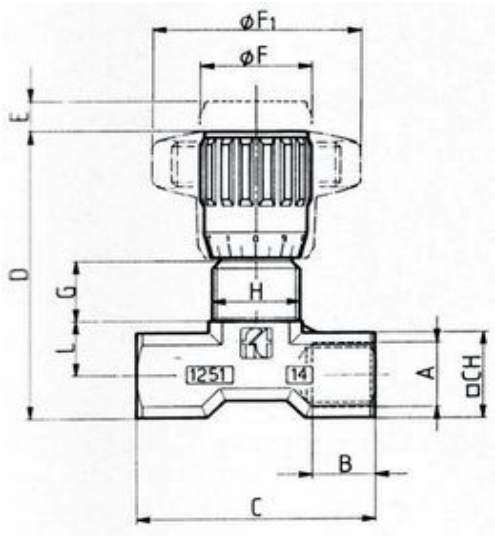

FT 1251/2-01

TIPO	A	B	C	D	E	F	F1	G	H	L	CH	PESO KG
18	1/8"G	8	40	55	4	22	40	12	M15X1	9.5	15	0.105
14	1/4"G	12	46	57	4.5	22	40	11.5	M17X1	11	17	0.122
38	3/8"G	13	55	69	7	27	50	12.5	M20X1,5	15	22	0.233
12	1/2"G	16	70	82	10	33	70	13	M25X1,5	19	27	0.455
34	3/4"G	20	91	100	12	38	80	15	M30X1,5	22	34	0.860

CARATTERISTICHE:
Garantiscono un preciso controllo del fluido in un verso e consentono il libero passaggio in quello opposto grazie al gruppo unidir. di tipo a sfera con gabbia di guida e e centraggio di cui sono dotate.

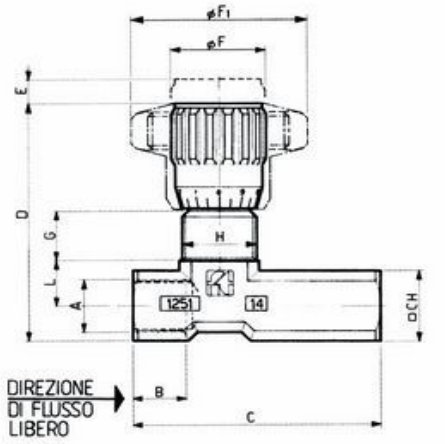

FT 1251/5-01

TIPO	A	B	C	D	E	F	F1	G	H	L	CH	PESO KG
14	1/4"G	12	56	57	4.5	22	40	11.5	M17X1	11	17	0.138
38	3/8"G	13	64.5	69	7	27	50	12.5	M20X1,5	15	22	0.259
12	1/2"G	16	87	82	10	33	70	13	M25X1,5	19	27	0.499
34	3/4"G	20	115	100	12	38	80	15	M30X1,5	22	34	0.975

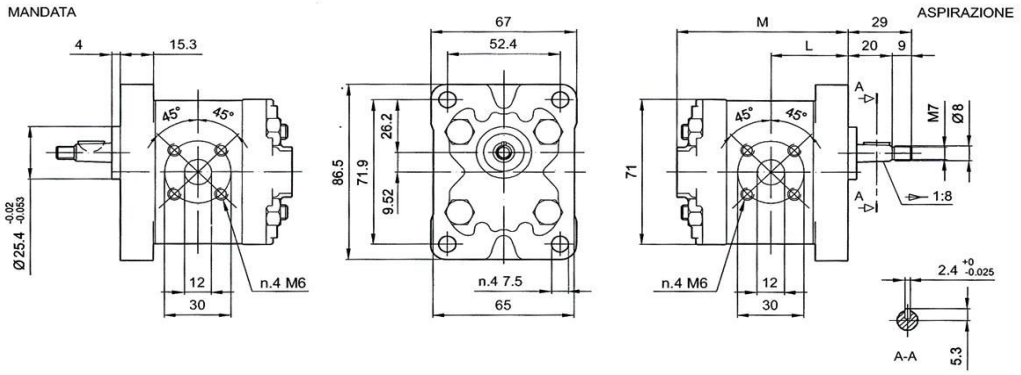

CODICE	CILINDRATA cm3/giro	PRESSIONI MASSIME cm3/giro P1	P2	VELOCITA' max giri/min	DIMENSIONI L	M
1 TK 1.1 S/D	1.1	bar 230	bar 250	6000	mm 34	mm 75
1 TK 1.3 S/D	1.3	bar 230	bar 250	6000	mm 34,5	mm 76
1 TK 1.6 S/D	1.6	bar 230	bar 250	6000	mm 35	mm 77
1 TK 2.1 S/D	2.1	bar 230	bar 250	6000	mm 36	mm 79
1 TK 2.7 S/D	2.7	bar 230	bar 250	6000	mm 37	mm 81
1 TK 3.2 S/D	3.2	bar 210	bar 230	5000	mm 38	mm 83
1 TK 3.7 S/D	3.7	bar 210	bar 230	4500	mm 39	mm 85
1 TK 4.2 S/D	4.2	bar 210	bar 230	4000	mm 40	mm 87
1 TK 4.8 S/D	4.8	bar 190	bar 210	3500	mm 41	mm 89
1 TK 5.8 S/D	5.8	bar 190	bar 210	3000	mm 43	mm 93
1 TK 8.0 S/D	08	bar 190	bar 180	2100	mm 47	mm 101

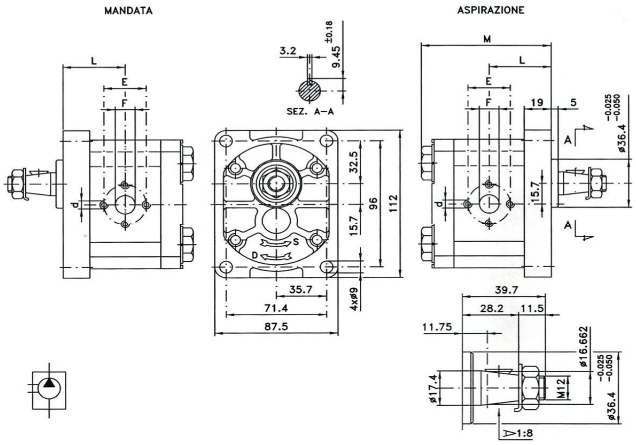

CODICE	CILINDRATA cm3/giro	PRESSIONI MASSIME		VELOCITA' MASSIMA	DIMENSIONI L	M	ASPIRAZIONE INLET		MANDATA OUTLET	
		P1	P2	max giri/min	mm	mm	E mm	d mm	E mm	d mm
2 TK 04 S/D	4	bar 200	bar 250	3000	40	93	30	M 6	30	M 6
2 TK 06 S/D	6	bar 200	bar 250	3000	41	95	30	M 6	30	M 6
2 TK 08 S/D	8	bar 200	bar 250	3000	43	98	30	M 6	30	M 6
2 TK 10 S/D	10	bar 200	bar 250	3000	44	101	40	M 8	30	M 6
2 TK 12 S/D	12	bar 200	bar 230	3000	46	105	40	M 8	30	M 6
2 TK 14 S/D	14	bar 200	bar 230	3000	47	107	40	M 8	30	M 6
2 TK 16 S/D	16	bar 200	bar 230	3000	49	111	40	M 8	30	M 6
2 TK 20 S/D	20	bar 190	bar 230	3000	52	117	40	M 8	30	M 6
2 TK 25 S/D	25	bar 190	bar 200	2500	56	125	40	M 8	30	M 6

S = Sinistra D = Destra

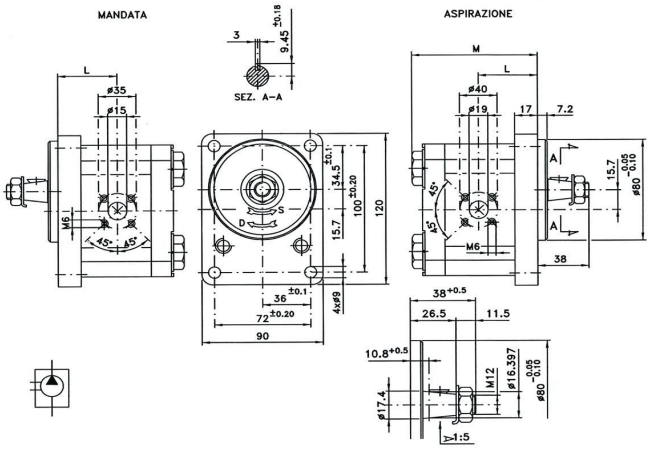

CODICE	CILINDRATA cm3/giro	PRESSIONI MASSIME cm3/giro P1	P2	VELOCITA' max giri/min	DIMENSIONI L	M
2 TK 4.2 S/D(B)	4.2	bar 220	bar 250	3000	mm 44,3	mm 92
2 TK 6.2 S/D(B)	6.2	bar 220	bar 250	3000	mm 45,8	mm 95,1
2 TK 8.5 S/D(B)	8.5	bar 220	bar 250	3000	mm 47,4	mm 98,2
2 TK 11 S/D(B)	11.0	bar 210	bar 230	3000	mm 49,5	mm 102,4
2 TK 15 S/D(B)	15.0	bar 210	bar 230	3000	mm 52,6	mm 108,6
2 TK 19 S/D(B)	19.0	bar 210	bar 230	3000	mm 55,2	mm 113,9
2 TK 22 S/D(B)	22.0	bar 200	bar 220	3000	mm 57,9	mm 119,2
2 TK 26 S/D(B)	26.0	bar 190	bar 210	2500	mm 61	mm 125,3

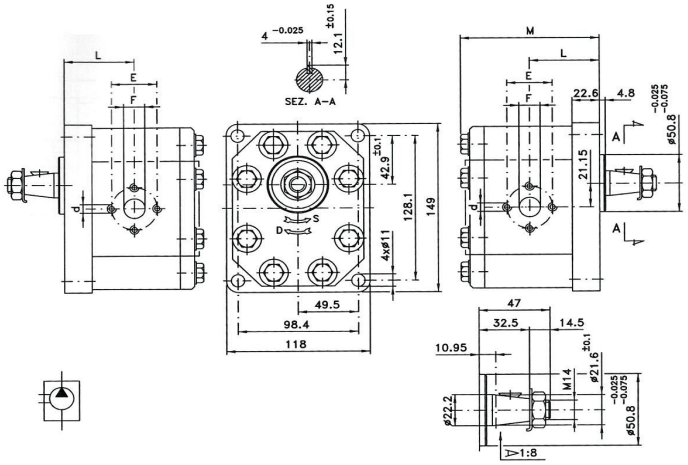

CODICE	CILINDRATA	PRESSIONI MASSIME		VELOCITA' MASSIMA	DIMENSIONI L	M	ASPIRAZIONE INLET		MANDATA OUTLET	
	cm3/giro	P1	P2	max giri/min	mm	mm	E mm	d mm	E mm	d mm
3 TK 20 S/D	20	bar 220	bar 250	2500	56.1	116.7	40	M 8	40	M 8
3 TK 22 S/D	22	bar 220	bar 250	2500	57.6	119.7	40	M 8	40	M 8
3 TK 25 S/D	25	bar 220	bar 250	2500	58.3	121.1	40	M 8	40	M 8
3 TK 28 S/D	28	bar 220	bar 250	2500	60.2	124.7	40	M 8	40	M 6
3 TK 32 S/D	32	bar 220	bar 250	2500	66.5	137.3	51	M 10	40	M 8
3 TK 36 S/D	36	bar 220	bar 250	2300	68	140.5	51	M 10	40	M 8
3 TK 42 S/D	42	bar 200	bar 230	2300	70.8	146.1	51	M 10	40	M 8
3 TK 46 S/D	46	bar 200	bar 230	2100	72.7	149.8	51	M 10	40	M 8
3 TK 50 S/D	50	bar 170	bar 200	2100	74.5	153.4	51	M 10	40	M 8
3 TK 55 S/D	55	bar 170	bar 200	1800	76.7	157.9	51	M 10	40	M 8
3 TK 60 S/D	60	bar 150	bar 180	1800	78.7	162.4	51	M 10	40	M 8

S = Sinistra D = Destra

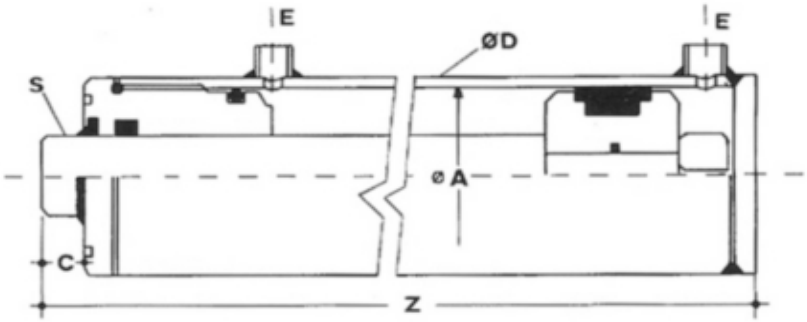

Ø D	Ø AL	Ø S	CORSA	CODICE	Z	C	E	L	L1	KG
35	25	16	50	HM0025160050	135	17	1/4"	33	15	0,70
			100	HM0025160100	185					0,95
			150	HM0025160150	235					1.25
			200	HM0025160200	285					1.50
42	32	20	50	HM0032200050	155	16	1/4"	33	20	1.30
			100	HM0032200100	205					1.60
			150	HM0032200150	255					1.95
			200	HM0032200200	305					2.30
			250	HM0032200250	355					2.70
			300	HM0032200300	405					3.00
			400	HM0032200400	505					3.70
			500	HM0032200500	605					4.40
50	40	20	100	HM01200100	230	22	1/4"	40	23	2.27
			150	HM01200150	280					2.67
			200	HM01200200	330					3.05
			250	HM01200250	380					3.45
			300	HM01200300	430					3.85
			350	HM01200350	480					4.27
			400	HM01200400	530					4.65
			450	HM01200450	580					5.08
			500	HM01200500	630					5.49
50	40	25	100	HM01250100	230	22	1/4"	40	23	2.50
			150	HM01250150	280					2.95
			200	HM01250200	330					3.39
			250	HM01250250	380					3.85
			300	HM01250300	430					4.32
			350	HM01250350	480					4.79
			400	HM01250400	530					5.26
			450	HM01250450	580					5.72
			500	HM01250500	630					6.20
			550	HM01250550	680					6.60
			600	HM01250600	730					7.13

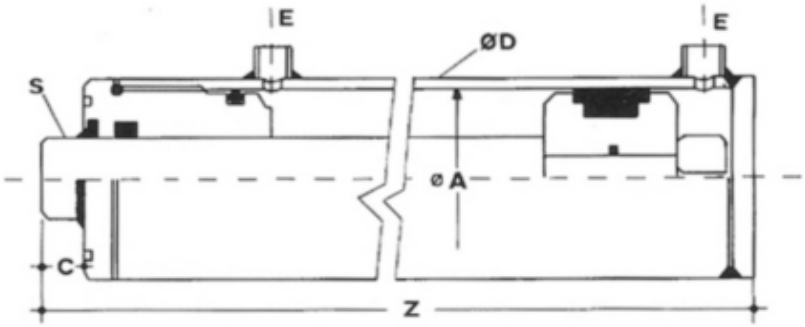

Ø D	Ø AL	Ø S	CORSA	CODICE	Z	C	E	L	L1	KG
70	60	35	100	HM03350100	260	23	3/8"	50	30	5,07
			150	HM03350150	310					5,85
			200	HM03350200	360					6.60
			250	HM03350250	410					7.40
			300	HM03350300	460					8.15
			350	HM03350350	510					8.94
			400	HM03350400	560					9.72
			450	HM03350450	610					10.47
			500	HM03350500	660					11.25
			550	HM03350550	710					12.00
			600	HM03350600	760					12.81
			800	HM03350800	960					15.87
			1000	HM03351000	1160					18.93
70	60	40	200	HM03400200	360	23	3/8"	50	30	7.25
			250	HM03400250	410					8.14
			300	HM03400300	460					9.03
			350	HM03400350	510					9.90
			400	HM03400400	560					10.79
			450	HM03400450	610					11.64
			500	HM03400500	660					12.52
			550	HM03400550	710					13.45
			600	HM03400600	760					14.30
			800	HM03400800	960					17.82
			1000	HM03401000	1160					21.40
73	63	40	200	HM0063400200	360	23	3/8"	50	30	7.60
			250	HM0063400250	410					8.50
			300	HM0063400300	460					9.40
			350	HM0063400350	510					10.30
			400	HM0063400400	560					11.20
			450	HM0063400450	610					12.10
			500	HM0063400500	660					13.00
			550	HM0063400550	710					13.90
			600	HM0063400600	760					14.80
			800	HM0063400800	960					18.50
			1000	HM0063401000	1160					22.10

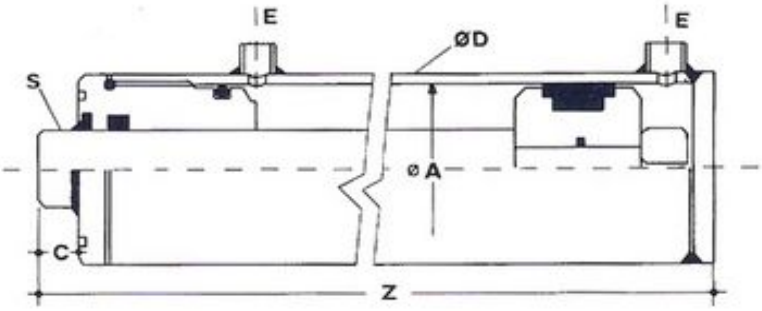

Ø D	Ø AL	Ø S	CORSA	CODICE	Z	C	E	L	L1	KG
80	70	35	100	HM04350100	260	23	3/8"	50	33	6,09
			150	HM04350150	310					6,95
			200	HM04350200	360					7.74
			250	HM04350250	410					8.60
			300	HM04350300	460					9.40
			350	HM04350350	510					10.26
			400	HM04350400	560					11.00
			450	HM04350450	610					11.88
			500	HM04350500	660					12.60
			550	HM04350550	710					13.66
			600	HM04350600	760					14.20
			800	HM04350800	960					17.56
			1000	HM04351000	1160					21.26
80	70	40	200	HM04400200	360	23	3/8"	50	33	8.28
			250	HM04400250	410					9.26
			300	HM04400300	460					10.24
			350	HM04400350	510					11.20
			400	HM04400400	560					12.80
			450	HM04400450	610					13.11
			500	HM04400500	660					14.01
			550	HM04400550	710					15.10
			600	HM04400600	760					15.99
			800	HM04400800	960					19.73
			1000	HM04401000	1160					23.51
92	80	40	200	HM05400200	380	25	1/2"	60	35	11.08
			250	HM05400250	430					12.22
			300	HM05400300	480					13.35
			400	HM05400400	580					15.56
			500	HM05400500	680					17.77
			600	HM05400600	780					19.98
			800	HM05400800	980					24.50
			1000	HM05401000	1180					28.92

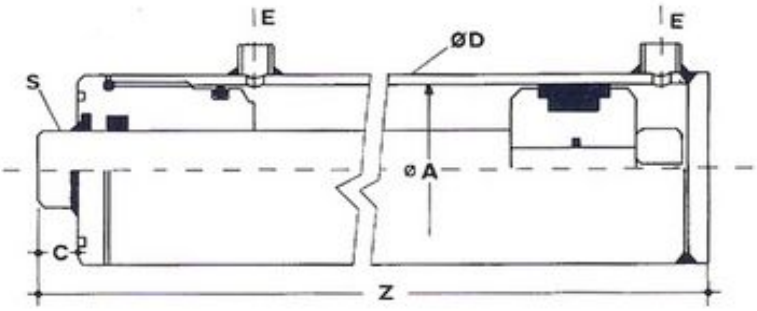

Ø D	Ø AL	Ø S	CORSA	CODICE	Z	C	E	L	L1	KG
92	80	50	200	HM05500200	380	25	1/2"	60	35	12,35
			250	HM05500250	430					13,73
			300	HM05500300	480					15.15
			400	HM05500400	580					17.95
			500	HM05500500	680					20.71
			600	HM05500600	780					24.00
			800	HM05500800	980					29.50
			1000	HM05501000	1180					35.00
115	100	50	200	HM06500200	410	25	1/2"	82	38	19.50
			250	HM06500250	460					21.50
			300	HM06500300	510					23.00
			400	HM06500400	610					26.50
			500	HM06500500	710					30.00
			600	HM06500600	810					33.50
			800	HM06500800	1010					40.50
			1000	HM06501000	1210					47.50
115	100	60	300	HM06600300	510	25	1/2"	82	38	22.50
			400	HM06600400	610					29.50
			500	HM06600500	710					33.50
			600	HM06600600	810					37.50
			800	HM06600800	1010					46.00
			1000	HM06601000	1210					54.50

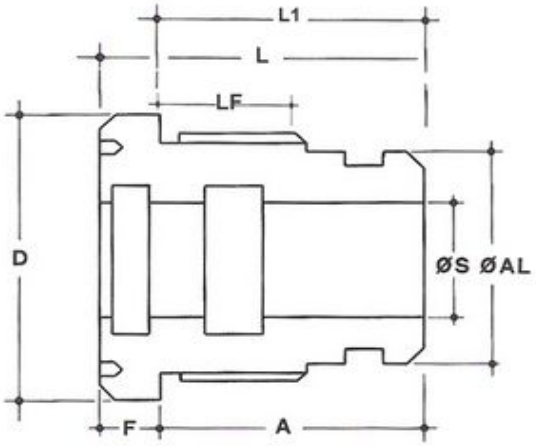

Ø D	Ø AL	Ø S	F	CODICE	LF	L1	L	KG
35	25	16	28X1,5	CG03502516	12		30	0,04
40	30	16	34X1,5	CG04003016	15	27	33	0,17
42	32	16	36X1,5	CG04203216	15	27	33	0.18
42	32	20	36X1,5	CG04203220	15	27	33	0.17
44	35	20	39X1,5	CG04503520	19	32	40	0.19
44	35	22	39X1,5	CG04503522	19	32	40	0.17
49	40	20	44X1,5	CG05004020	19	32	40	0.28
49	40	22	44X1,5	CG05004022	19	32	40	0.26
49	40	25	44X1,5	CG05004025	19	32	40	0.23
54	45	22	49X1,5	CG05504522	19	32	40	0.36
54	45	25	49X1,5	CG05504525	19	32	40	0.33
59	50	20	54X1,5	CG06005020	22	35	43	0.53
59	50	25	54X1,5	CG06005025	22	35	43	0.46
59	50	30	54X1,5	CG06005030	22	35	43	0.39
59	50	35	54X1,5	CG06005035	17	30	38	0.29
64	55	25	60X1,5	CG06505525	21	35	43	0.68
64	55	30	60X1,5	CG06505530	21	35	43	0.54
64	55	35	60X1,5	CG06505535	21	35	43	0.45
69	60	25	64X1,5	CG07006025	27	40	50	0.95
69	60	30	64X1,5	CG07006030	27	40	50	0.80
69	60	35	64X1,5	CG07006035	27	40	50	0.70
69	60	40	64X1,5	CG07006040	27	40	50	0.60
73	63	30	68X1,5	CG07306330	25	40	50	1.08
73	63	35	68X1,5	CG07306335	25	40	50	0.98
73	63	40	68X1,5	CG07306340	25	40	50	0.62
74	65	30	69X1,5	CG07506530	25	40	50	1.25
74	65	35	69X1,5	CG07506535	25	40	50	1.11
74	65	40	69X1,5	CG07506540	25	40	50	0.98
74	65	45	69X1,5	CG08006545	25	40	50	0.72
79	70	25	74X1,5	CG08007025	27	40	50	1.30
79	70	30	74X1,5	CG08007030	27	40	50	1.17
79	70	35	74X1,5	CG08007035	27	40	50	1.06
79	70	40	74X1,5	CG08007040	27	40	50	0.94
79	70	45	74X1,5	CG08007045	27	40	50	0.76
79	70	50	74X1,5	CG08007050	27	40	50	0,66
89	75	30	80X2	CG09007530	33	50	60	1,72

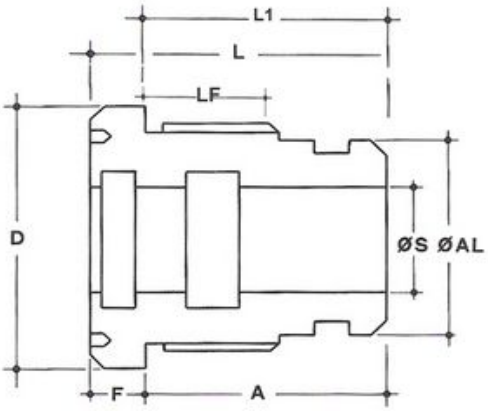

Ø D	Ø AL	Ø S	F	CODICE	LF	L1	L	KG
89	75	35	80X2	CG09007535	33	50	60	1.62
89	75	40	80X2	CG09007540	33	50	60	1.46
89	75	45	80X2	CG09007545	33	50	60	1.33
94	80	30	85X2	CG09508030	33	50	60	2.25
94	80	35	85X2	CG09508035	33	50	60	1.88
94	80	40	85X2	CG09508040	33	50	60	1.73
94	80	45	85X2	CG09508045	33	50	60	1.58
94	80	50	85X2	CG09508050	33	50	60	1.42
94	80	55	85X2	CG09508055	33	50	60	1.40
94	80	60	85X2	CG09508060	33	50	60	1.38
99	85	35	90X2	CG10008535	33	50	60	2.15
99	85	40	90X2	CG10008540	33	50	60	2.00
99	85	45	90X2	CG10008545	33	50	60	1.85
99	85	50	90X2	CG10008550	33	50	60	1.67
104	90	40	95X2	CG10509040	33	50	60	2.31
104	90	45	95X2	CG10509045	33	50	60	2.16
104	90	50	95X2	CG10509050	33	50	60	1.99
104	90	60	95X2	CG10509060	33	50	60	1.57
114	100	40	105X2	CG11510040	51	50	82	4.14
114	100	45	105X2	CG11510045	51	50	82	3.94
114	100	50	105X2	CG11510050	51	50	82	3.71
114	100	55	105X2	CG11510055	51	50	82	3.68
114	100	60	105X2	CG11510060	51	50	82	3.13
114	100	70	105X2	CG11510070	51	50	82	3.08
124	110	45	115X2	CG12511045	41	60	72	4.60
124	110	50	115X2	CG12511050	41	60	72	4.40
124	110	60	115X2	CG12511060	51	70	82	4.90
124	110	70	115X2	CG12511070	51	70	82	4.70
139	120	50	125X2	CG14012050	49	70	82	6.37
139	120	60	125X2	CG14012060	49	70	82	5.30
139	120	70	125X2	CG14012070	49	70	82	4.57
144	125	60	130X2	CG14512560	59	80	92	6.63
144	125	70	130X2	CG14512570	59	80	92	5.83
159	140	70	145X2	CG16014070	59	80	92	9.12
159	140	80	145X2	CG16014080	59	80	92	8.40
169	150	70	155X2	CG17015070	69	90	102	10.58
169	150	80	155X2	CG17015080	69	90	102	9.75

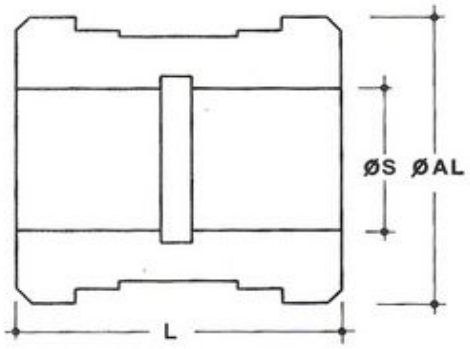

CODICE	Ø AL	Ø S	L	KG
CT00030013	30	13	24.7	0.02
CT00032013	32	13	30	0.09
CT00032015	32	15	30	0.09
CT00035015	35	15	40	0.16
CT00040015	40	15	40	0.23
CT00045015	45	15	40	0.31
CT00050015	50	15	40	0.31
CT00050020	50	20	40	0,35
CT00055020	55	20	40	0.42
CT00060020	60	20	50	0.71
CT00060024	60	24	45	0,56
CT00060027	60	27	50	0.61
CT00063020	63	20	50	0.70
CT00063024	63	24	45	0,65
CT00065020	65	20	50	0.88
CT00065024	65	24	45	0.72
CT00070020	70	20	50	0,81
CT00070024	70	24	45	0.76
CT00070027	70	27	50	0.71
CT00075024	75	24	45	0,93
CT00075027	75	27	50	1.00
CT00080024	80	24	45	1.11
CT00080027	80	27	50	1.23
CT00085024	85	24	45	1.30
CT00085027	85	27	50	1.43
CT00090027	90	27	50	1.66
CT00090033	90	33	50	1.55
CT00100027	100	27	50	2.06
CT00100033	100	33	50	1.95
CT00110033	110	33	50	2.49
CT00110040	110	40	50	2.33
CT00120040	120	40	50	2,95
CT00125040	125	40	50	3.24
CT00140040	140	40	58	5.04
CT00150040	150	40	58	5,67
CT00160051	160	51	58	6,60
CT11180080	180	80X2	82	9,75
CT11200080	200	80X2	82	13,00
CT11250080	250	98X2	82	21,60

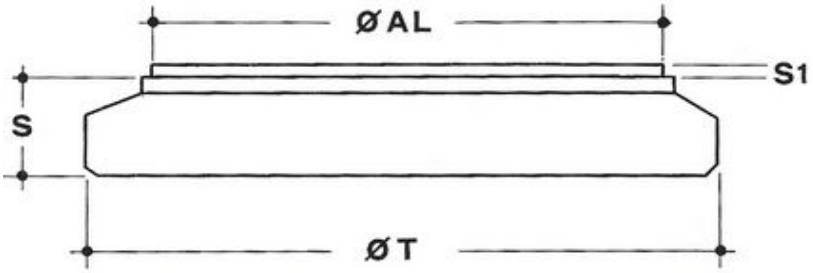

CODICE	Ø AL	Ø T	S	S1	KG
CF00025035	25	35	7	2	0.04
CF00030040	30	40	8	2	0.06
CF00032042	32	42	8	2	0.06
CF00035045	35	45	10	2	0.1
CF00040050	40	50	10	2	0.13
CF00045055	45	55	10	2	0.16
CF00050060	50	60	10	2	0.19
CF00055065	55	65	12	2	0,28
CF00060070	60	70	12	2	0.33
CF00063073	63	73	12	2	0.35
CF00065075	65	75	12	2	0,38
CF00065080	65	80	12	2	0.4
CF00070080	70	80	12	2	0.43
CF00070085	70	85	12	2	0,45
CF00075090	75	90	12	2	0.53
CF00080090	80	90	12	2	0.55
CF00080095	80	95	12	2	0,58
CF00085100	85	100	15	2	0.77
CF00090105	90	105	15	2	0.86
CF00100115	100	115	15	2	1,05
CF00110125	110	125	15	2	1.34
CF00110130	110	130	15	2	1.40
CF00120140	120	140	18	2	2.00
CF00125145	125	145	18	2	2.11
CF00140160	140	160	18	2	2.67
CF00150170	150	170	20	2	3.33
CF00160180	160	180	20	2	3.79